ICS: 25.160.10

Geregistreerde Belgische norm

NBN EN ISO 17660-1

1e uitg., januari 2007

Normklasse: F 11

Lassen - Lassen van betonstaal - Deel 1: Belaste lasverbindingen (ISO 17660-1:2006)

Soudage - Soudage des aciers d'armatures - Partie 1: Assemblages transmettant des efforts (ISO 17660-1:2006)

Welding - Welding of reinforcing steel - Part 1: Load-bearing welded joints (ISO 17660-1:2006)

Toelating tot publicatie: 03 november 2006

Deze Europese norm EN ISO 17660-1:2006 heeft de status van een Belgische norm.

Deze Europese norm bestaat in drie officiële versies (Duits, Engels, Frans).

Belgisch instituut voor normalisatie (BIN), vereniging zonder winstoogmerk
Brabançonnelaan 29 - 1000 BRUSSEL - telefoon: 02 738 01 12 - fax: 02 733 42 64
e-mail: info@bin.be - BIN Online: www.bin.be - prk. 000-0063310-66

© BIN 2007

Prijsgroep: 26

ICS: 25.160.10

norme belge enregistrée

NBN EN ISO 17660-1

1e éd., janvier 2007

Indice de classement: F 11

Soudage - Soudage des aciers d'armatures - Partie 1: Assemblages transmettant des efforts (ISO 17660-1:2006)

Lassen - Lassen van betonstaal - Deel 1: Belaste lasverbindingen (ISO 17660-1:2006)

Welding - Welding of reinforcing steel - Part 1: Load-bearing welded joints (ISO 17660-1:2006)

Autorisation de publication: 03 novembre 2006

La présente norme européenne EN ISO 17660-1:2006 a le statut d'une norme belge.

La présente norme européenne existe en trois versions officielles (allemand, anglais, français).

Institut belge de normalisation (IBN), association sans but lucratif
avenue de la Brabançonne 29 - 1000 BRUXELLES - téléphone: 02 738 01 12 - fax: 02 733 42 64
e-mail: info@ibn.be - IBN Online: www.ibn.be - CCP. 000-0063310-66

© IBN 2007

Prix: groupe 26

EUROPEAN STANDARD

NORME EUROPÉENNE

EUROPÄISCHE NORM

EN ISO 17660-1

September 2006

ICS 25.160.10

English Version

Welding - Welding of reinforcing steel - Part 1: Load-bearing welded joints (ISO 17660-1:2006)

Soudage - Soudage des aciers d'armatures - Partie 1: Assemblages transmettant des efforts (ISO 17660-1:2006)

Schweißen - Schweißen von Betonstahl - Teil 1: Tragende Schweißverbindungen (ISO 17660-1:2006)

This European Standard was approved by CEN on 2 August 2006.

CEN members are bound to comply with the CEN/CENELEC Internal Regulations which stipulate the conditions for giving this European Standard the status of a national standard without any alteration. Up-to-date lists and bibliographical references concerning such national standards may be obtained on application to the Central Secretariat or to any CEN member.

This European Standard exists in three official versions (English, French, German). A version in any other language made by translation under the responsibility of a CEN member into its own language and notified to the Central Secretariat has the same status as the official versions.

CEN members are the national standards bodies of Austria, Belgium, Cyprus, Czech Republic, Denmark, Estonia, Finland, France, Germany, Greece, Hungary, Iceland, Ireland, Italy, Latvia, Lithuania, Luxembourg, Malta, Netherlands, Norway, Poland, Portugal, Romania, Slovakia, Slovenia, Spain, Sweden, Switzerland and United Kingdom.

EUROPEAN COMMITTEE FOR STANDARDIZATION
COMITÉ EUROPÉEN DE NORMALISATION
EUROPÄISCHES KOMITEE FÜR NORMUNG

Management Centre: rue de Stassart, 36 B-1050 Brussels

© 2006 CEN All rights of exploitation in any form and by any means reserved worldwide for CEN national Members.

Ref. No. EN ISO 17660-1:2006: E

Foreword

This document (EN ISO 17660-1:2006) has been prepared by Technical Committee CEN/TC 121 "Welding", the secretariat of which is held by DIN, in collaboration with Technical Committee ISO/TC 44 "Welding and allied processes".

This European Standard shall be given the status of a national standard, either by publication of an identical text or by endorsement, at the latest by March 2007, and conflicting national standards shall be withdrawn at the latest by March 2007.

According to the CEN/CENELEC Internal Regulations, the national standards organizations of the following countries are bound to implement this European Standard: Austria, Belgium, Cyprus, Czech Republic, Denmark, Estonia, Finland, France, Germany, Greece, Hungary, Iceland, Ireland, Italy, Latvia, Lithuania, Luxembourg, Malta, Netherlands, Norway, Poland, Portugal, Romania, Slovakia, Slovenia, Spain, Sweden, Switzerland and United Kingdom.

INTERNATIONAL STANDARD

ISO 17660-1

First edition
2006-09-01

Welding — Welding of reinforcing steel —

Part 1: Load-bearing welded joints

Soudage — Soudage des aciers d'armatures —

Partie 1: Assemblages transmettant des efforts

Reference number
ISO 17660-1:2006(E)

© ISO 2006

PDF disclaimer

This PDF file may contain embedded typefaces. In accordance with Adobe's licensing policy, this file may be printed or viewed but shall not be edited unless the typefaces which are embedded are licensed to and installed on the computer performing the editing. In downloading this file, parties accept therein the responsibility of not infringing Adobe's licensing policy. The ISO Central Secretariat accepts no liability in this area.

Adobe is a trademark of Adobe Systems Incorporated.

Details of the software products used to create this PDF file can be found in the General Info relative to the file; the PDF-creation parameters were optimized for printing. Every care has been taken to ensure that the file is suitable for use by ISO member bodies. In the unlikely event that a problem relating to it is found, please inform the Central Secretariat at the address given below.

© ISO 2006

All rights reserved. Unless otherwise specified, no part of this publication may be reproduced or utilized in any form or by any means, electronic or mechanical, including photocopying and microfilm, without permission in writing from either ISO at the address below or ISO's member body in the country of the requester.

ISO copyright office
Case postale 56 • CH-1211 Geneva 20
Tel. + 41 22 749 01 11
Fax + 41 22 749 09 47
E-mail copyright@iso.org
Web www.iso.org

Published in Switzerland

Contents

Page

Foreword ... iv
Introduction ... v
1 Scope ... 1
2 Normative references ... 1
3 Terms and definitions ... 2
4 Symbols and abbreviated terms ... 3
5 Welding processes ... 4
6 Load-bearing welded joints ... 4
7 Materials ... 14
8 Quality requirements ... 14
9 Welding personnel ... 15
10 Welding procedure specification (WPS) ... 16
11 Welding procedures ... 16
12 Production weld test ... 18
13 Execution and inspection of production welding of reinforcing steel ... 19
14 Examination and testing of test specimens ... 21
15 Production log ... 24
Annex A (informative) **Welding procedure specification (WPS) for welding processes 111, 114, 135 and 136** ... 25
Annex B (informative) **Technical knowledge of welding coordinator for welding reinforcing steel** ... 27
Annex C (informative) **Test specimens** ... 28
Annex D (informative) **Assessment of the manufacturer performing welding** ... 32
Annex E (informative) **Evaluation of testing of welded joints** ... 33
Annex F (informative) **Example for production log** ... 34
Annex G (informative) **Classification of shear strength of load-bearing cross joints** ... 35
Annex H (informative) **Examples of diameter combinations for welding cross joints using welding processes 21 and 23** ... 36
Bibliography ... 37

© ISO 2006 – All rights reserved

Foreword

ISO (the International Organization for Standardization) is a worldwide federation of national standards bodies (ISO member bodies). The work of preparing International Standards is normally carried out through ISO technical committees. Each member body interested in a subject for which a technical committee has been established has the right to be represented on that committee. International organizations, governmental and non-governmental, in liaison with ISO, also take part in the work. ISO collaborates closely with the International Electrotechnical Commission (IEC) on all matters of electrotechnical standardization.

International Standards are drafted in accordance with the rules given in the ISO/IEC Directives, Part 2.

The main task of technical committees is to prepare International Standards. Draft International Standards adopted by the technical committees are circulated to the member bodies for voting. Publication as an International Standard requires approval by at least 75 % of the member bodies casting a vote.

Attention is drawn to the possibility that some of the elements of this document may be the subject of patent rights. ISO shall not be held responsible for identifying any or all such patent rights.

ISO 17660-1 was prepared by the European Committee for Standardization (CEN) Technical Committee CEN/TC 121, *Welding*, in collaboration with Technical Committee ISO/TC 44, *Welding and allied processes*, Subcommittee SC 10, *Unification of requirements in the field of metal welding*, in accordance with the Agreement on technical cooperation between ISO and CEN (Vienna Agreement).

ISO 17660 consists of the following parts, under the general title *Welding — Welding of reinforcing steel*:

— *Part 1: Load-bearing welded joints*

— *Part 2: Non load-bearing welded joints*

Requests for official interpretations of any aspect of this part of ISO 17660 should be directed to the Secretariat of ISO/TC 44/SC 10 via your national standards body. A complete listing of these bodies can be found at www.iso.org.

© ISO 2006 – All rights reserved

Introduction

Reinforcing steel bars are produced by a number of process routes and usually have a ribbed profile. Taking these issues into account, it is apparent that both the welder and the welding coordinator require a specific level of skill and job knowledge and that special procedures for quality assurance need to be adopted.

© ISO 2006 – All rights reserved

Welding — Welding of reinforcing steel —

Part 1:
Load-bearing welded joints

1 Scope

This part of ISO 17660 is applicable to the welding of weldable reinforcing steel and stainless reinforcing steel of load-bearing joints, in workshops or on site. It specifies requirements for materials, design and execution of welded joints, welding personnel, quality requirements, examination and testing.

This part of ISO 17660 also covers welded joints between reinforcing steel bars and other steel components, such as connection devices and insert anchors, including prefabricated assemblies. Non load-bearing joints are covered by ISO 17660-2.

This part of ISO 17660 is not applicable to factory production of welding fabric and lattice girders using multiple spot welding machines or multiple projection welding machines.

The requirements of this part of ISO 17660 are only applicable to static loaded structures.

NOTE For fatigue-loaded structures, depending on type of joint and welding process, it is recommended that an appropriate reduction be taken into account on the fatigue strength of the reinforcing steel.

2 Normative references

The following referenced documents are indispensable for the application of this document. For dated references, only the edition cited applies. For undated references, the latest edition of the referenced document (including any amendments) applies.

ISO 3834-3 *Quality requirements for fusion welding of metallic materials — Part 3: Standard quality requirements*

ISO 5817, *Welding — Fusion-welded joints in steel, nickel, titanium and their alloys (beam welding excluded) — Quality levels for imperfections*

ISO 9606-1, *Approval testing of welders — Fusion welding — Part 1: Steels*

ISO 14731:—[1], *Welding coordination — Tasks and responsibilities*

ISO 14732[2], *Welding personnel — Approval testing of welding operators for fusion welding and of resistance weld setters for fully mechanized and automatic welding of metallic materials*

ISO 15609-1, *Specification and qualification of welding procedures for metallic materials — Welding procedure specification — Part 1: Arc welding*

ISO 15609-2, *Specification and qualification of welding procedures for metallic materials — Welding procedure specification — Part 2: Gas welding*

---

1) To be published (revision of ISO 14731:1997, EN 719:1994).

2) Equivalent to EN 1418.

© ISO 2006 – All rights reserved

ISO 15609-5, *Specification and qualification of welding procedures for metallic materials — Welding procedure specification — Part 5: Resistance welding*

ISO 15614-1, *Specification and qualification of welding procedures for metallic materials — Welding procedure test — Part 1: Arc and gas welding of steels and arc welding of nickel and nickel alloys*

ISO 15614-12, *Specification and qualification of welding procedures for metallic materials — Welding procedure test — Part 12: Spot, seam and projection welding*

ISO 15614-13, *Specification and qualification of welding procedures for metallic materials — Welding procedure test — Part 13: Resistance butt and flash welding*

ISO 15620, *Welding — Friction welding of metallic materials*

ISO 15630-1, *Steel for the reinforcement and prestressing of concrete — Test methods — Part 1: Reinforcing bars, wire rod and wire*

ISO 15630-2, *Steel for the reinforcement and prestressing of concrete — Test methods — Part 2: Welded fabric*

ISO 16020, *Steel for the reinforcement and prestressing of concrete — Vocabulary*

EN 10079, *Definition of steel products*

EN 10080, *Steel for the reinforcement of concrete — Weldable reinforcing steel — General*

EN 10164, *Steel products with improved deformation properties perpendicular to the surface of the product — Technical delivery conditions*

3 Terms and definitions

For the purposes of this document, the terms and definitions given in EN 10079, EN 10080 and ISO 16020 and the following apply.

3.1
load-bearing welded joint
welded joint used for transmission of specified loads between reinforcing steel bars or between reinforcing steel bars and other steel products

3.2
non load-bearing welded joint
welded joint whose strength is not taken into account in the design of the reinforced concrete structure

NOTE The purpose of a non load-bearing welded joint is usually only to keep the reinforcing components in their correct places during fabrication, transport and concreting. The weld is often called tack weld.

3.3
shear factor
S_f
relation between the shear force of a cross joint and the nominal yield strength R_e, multiplied by the nominal cross section area A_s of the loaded bar

3.4
manufacturer
enterprise carrying out the welding works within workshops or on site

 © ISO 2006 – All rights reserved

4 Symbols and abbreviated terms

a	throat thickness
A_{gt}	percentage total elongation at maximum force
A_n	nominal cross-sectional area of the bar
A_s	nominal cross-sectional area of the bar to be anchored
b	excess of the bar
d	nominal diameter of the welded bar
d_{max}	maximum nominal diameter of the welded bar
d_{min}	minimum nominal diameter of the welded bar
e	distance between the bars
F	force to be anchored by transverse bar
F_{max}	maximum tensile force
F_s	shear force
l	length of the weld (cross joint)
l_o	overall lap length
L_{min}	minimum length of the test specimen
r	radius of bent reinforcing steel bar
R_e	specified characteristic yield strength of the reinforcing steel
R_m	nominal tensile strength of the reinforcing steel
S_f	shear factor
t	thickness of the web of a section or of a plate to be welded
t_{min}	minimum thickness of the web of a section or of a plate to be welded
w	weld width
x	root gap
y	depth of root face
α	included angle
BW	butt weld
CEV	carbon equivalent value
FW	fillet weld
SF	Shear factor class
WPQR	welding procedure qualification record
WPS	welding procedure specification

© ISO 2006 – All rights reserved

5 Welding processes

The following welding processes in accordance with ISO 4063 may be used (see Table 1):

Table 1 — List of welding processes and reference numbers in accordance with ISO 4063

Welding process	English term	American term
111	manual metal arc welding (metal arc welding with covered electrode)	shielded metal arc welding
114	self-shielded tubular cored arc welding	
135	metal active gas welding (MAG-welding)	gas metal arc welding
136	tubular cored metal arc welding with active gas shield	flux cored arc welding
21	resistance spot welding	
23	projection welding	
24	flash welding	
25	resistance butt welding	
42	friction welding	
47	oxy-fuel gas pressure welding	pressure gas welding

The principles of this part of ISO 17660 may be applied to other welding processes.

6 Load-bearing welded joints

6.1 General

A summary of common ranges of bar diameters for welded joints, depending on the welding process, is given in Table 2.

Table 2 — Common ranges of bar diameters for welded joints

Welding processes	Type of welded joint	Range of bar diameters for load-bearing welded joint mm
21 23	cross joint [a]	4 to 20
24	butt joint	5 to 50
25		5 to 25
42	butt joint	6 to 50
	joint to other steel component	6 to 50
47	butt joint	6 to 50
111 114 135 136	butt joint without backing	⩾ 16
	butt joint with permanent backing	⩾ 12
	lap joint	6 to 32
	strap joint	6 to 50
	cross joint [a]	6 to 50
	joint to other steel components	6 to 50

[a] d_{min}/d_{max} should be ⩾ 0,4.

© ISO 2006 – All rights reserved

The joints specified in 6.2, 6.3, 6.4 and 6.6 are designed to give full load-bearing capacity of the bar. Exceptions are possible for butt welds and joints between reinforcing steel bars and other steel components, and shall be specified. For cross joints, the shear strength shall be specified in the design (see also Annex G).

The welded joint shall meet the strength and ductility requirements of the specific reinforcing steel, unless such requirements are deemed to be irrelevant for the functions of the welded product.

The joints specified below are examples of good practice. Other joint configurations may be used if they can be shown to meet the requirements of Clause 11.

6.2 Butt joints

6.2.1 Butt joints welded by welding processes 111, 114, 135 and 136

Examples of butt joint preparation for load-bearing welded joints are given in Figures 1a) to 1d). Other joint preparations or types of permanent backing may also be used.

The prepared joint shall be bevelled. The joint preparation should be carried out by grinding or flame cutting.

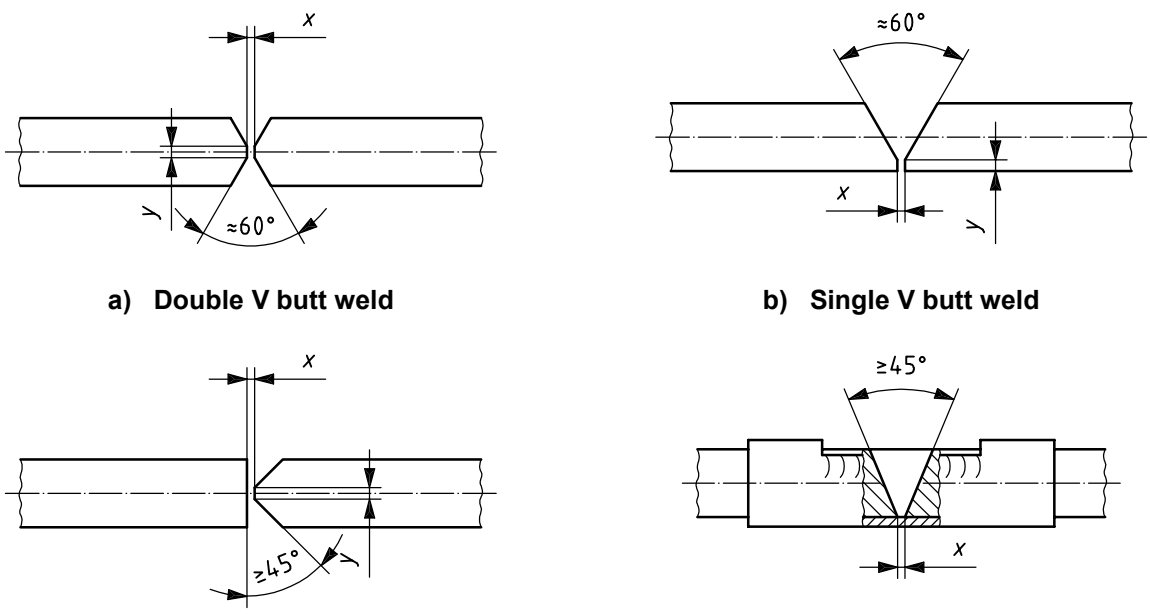

a) Double V butt weld

b) Single V butt weld

c) Double bevel butt weld

d) Single V butt weld with backing

Key

x root gap

y depth of root face

NOTE x and y depend on the welding process.

Figure 1 — Examples for preparation of butt joints

6.2.2 Butt joints welded by welding processes 24, 25, 42 and 47

For welding processes 24, 25 and 47, the misalignment of the bars shall not exceed 1 mm for the nominal bar diameters $\leqslant$ 10 mm, and 10 % of the nominal bar diameter for the other values.

© ISO 2006 – All rights reserved

For welding processes 24, 25 and 47, only bars with the same diameter shall be welded together.

For welding process 42, the maximum misalignment of the bars shall be specified.

6.3 Lap joints

Lap joints using single-sided intermittent lap welds (asymmetric force flow) shall be welded in accordance with Figure 2.

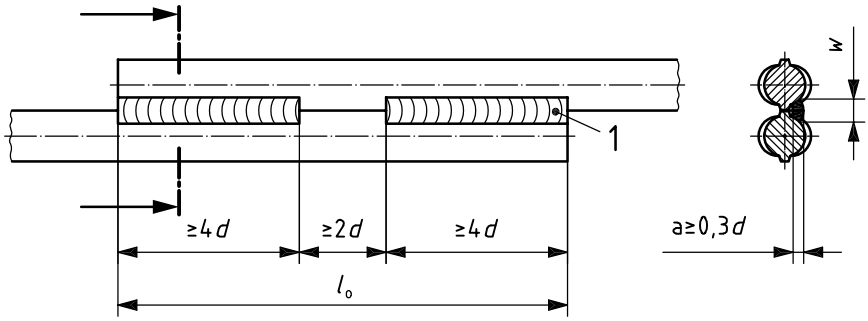

Key

1 weld

a throat thickness

d nominal diameter of the thinner of the two welded bars

l_o overall lap length

w weld width

NOTE Welding is also possible on both sides with minimum weld length of 2,5 d. A conservative estimate of the effective throat thickness can be taken as $a \approx 0{,}5\ w$.

Figure 2 — Lap joint

6.4 Strap joints

Strap joints with single-sided lap welds shall be welded in accordance with Figure 3.

Where the straps and the bars have the same mechanical properties, the combined cross-sectional area of the two straps shall be equal to or greater than the cross-sectional area of the bars to be joined. Where the straps and the bars do not have the same mechanical properties, the cross-sectional area of the straps shall be adapted on the basis of the ratio of their individual nominal yield stresses.

© ISO 2006 – All rights reserved

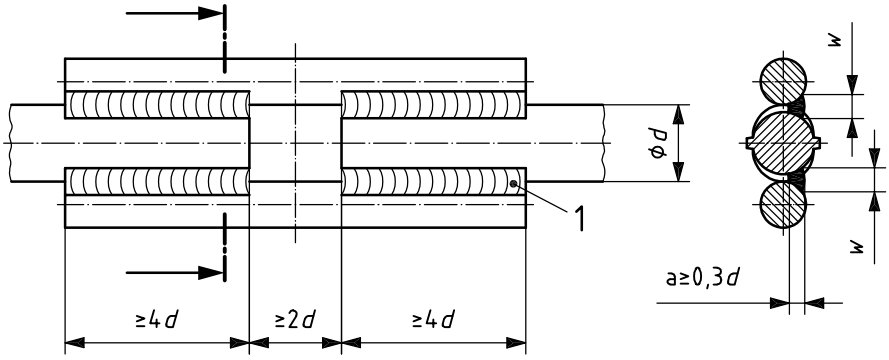

Key

1 weld

a throat thickness

d nominal diameter of the thinner of the two welded bars

w weld width

NOTE Welding is also possible on both sides with minimum weld length of 2,5 d. A conservative estimate of the effective throat thickness can be taken as $a \approx 0{,}4\ w$.

Figure 3 — Strap joint

6.5 Cross joints

6.5.1 General

The required shear factor (S_f) of the cross joint should be specified on the drawings (for shear factor classification, see Annex G) and shall be verified by testing in accordance with Clause 14.

6.5.2 Cross joints for welding processes 111, 114, 135 and 136

Cross joints shall be welded in accordance with Figure 4. The joint shall be welded, whenever possible, from at least two sides with two equal welds (see Figure 4a).

If only one single-sided weld is used, the shear strength of the welded joint shall be verified with the force applied as shown in Figure 4b.

To avoid cracks in the weld, the following conditions shall be fulfilled:

— a minimum throat thickness $a \geqslant 0{,}3\ d_{min}$;

— a minimum length of the weld $l \geqslant 0{,}5\ d_{min}$.

If more than one transverse bar is used on the same side of the longitudinal bar, the spacing of the transverse bars shall be at least three times the nominal diameter of the transverse bar.

© ISO 2006 – All rights reserved

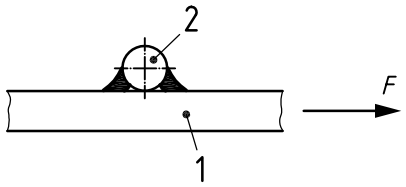

a) Double-sided weld

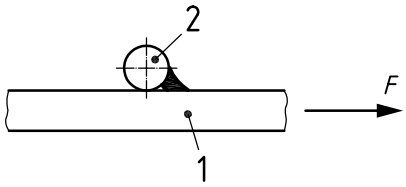

b) Single-sided weld

Key

1 longitudinal bar

2 transverse bar

F force to be anchored by transverse bar

Figure 4 — Cross joint welded by welding processes 111, 114, 135 or 136

6.5.3 Cross joints for welding processes 21 and 23

Cross joints made by welding processes 21 and 23 shall be welded in accordance with Figure 5.

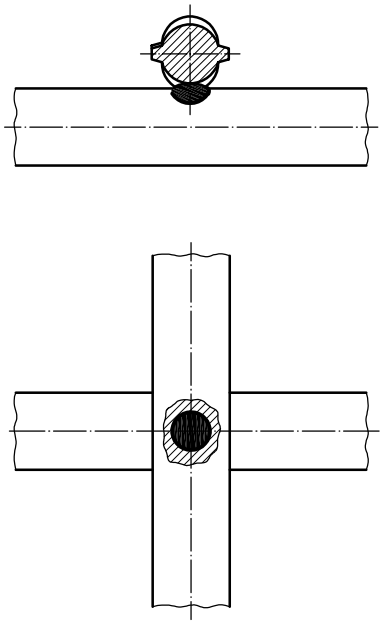

Figure 5 — Cross joints welded by welding processes 21 and 23

© ISO 2006 – All rights reserved

6.6 Joints between reinforcing steel bars and other steel components

6.6.1 General

The material thicknesses of the steel components given in Figures 6 to 9 are prescribed on the basis of welding criteria. Greater material thicknesses may be required as a result of detailed structural analysis.

If the weld length or material thickness of the steel components vary from the values prescribed in Figures 6, 7, 8 and 9, then the alternative dimensions shall be proven by data provided from actual tests.

The details of such tests shall be specified and documented.

The choice of material, calculation and design of the steel component shall be made in accordance with relevant design specifications.

Welded joints between reinforcing steel in accordance with 7.1.1 and stainless steels or fine grain structural steels are permitted.

6.6.2 Types of joint

6.6.2.1 Side lap weld joints

The load-bearing welded joints made by side lap welds are shown in Figures 6 and 7. The joints welded by single-sided lap welds shall be welded in accordance with the dimensions for the lap joint (see 6.3) and the joints welded by double-sided lap welds shall be welded in accordance with the dimensions for the strap joint (see 6.4).

© ISO 2006 – All rights reserved

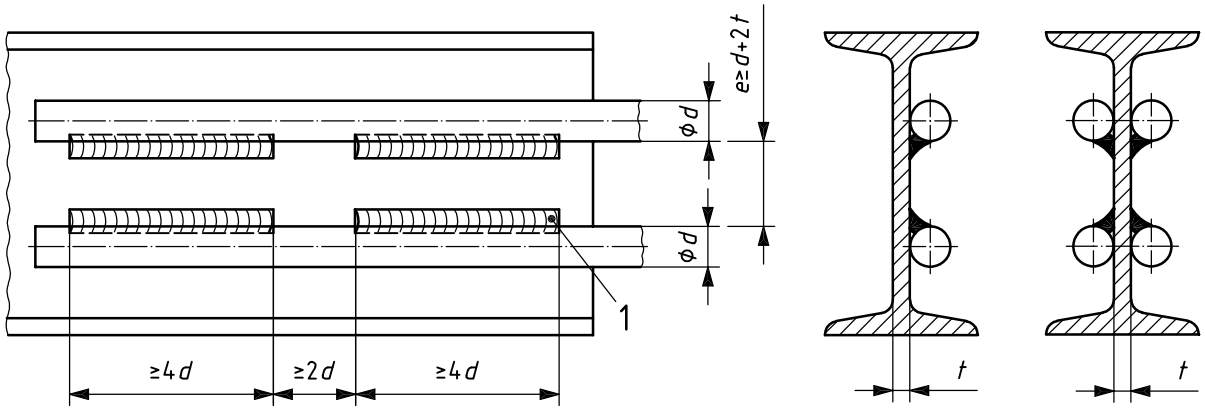

0,4 $d \leqslant t$, but t_{min} = 4 mm

a) Side lap joint, single-sided welded

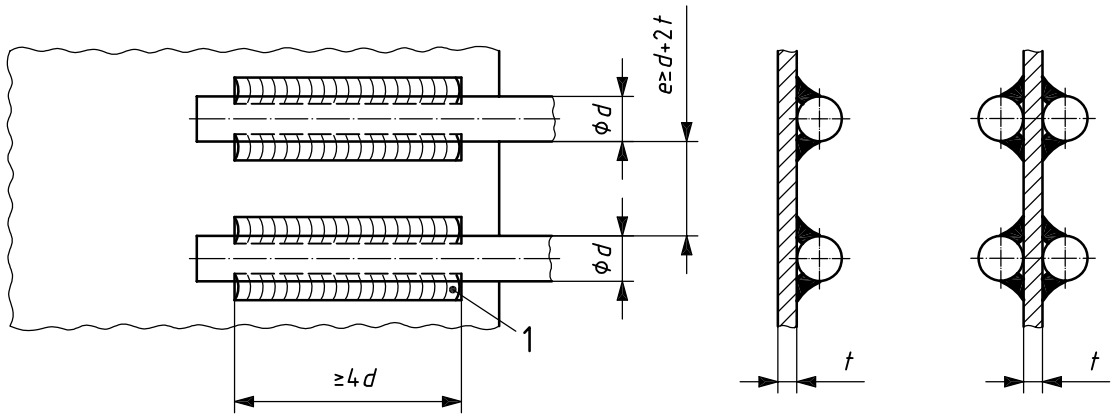

0,4 $d \leqslant t$, but t_{min} = 4 mm

b) Side lap joint, double-sided welded

Key

1 weld

d nominal diameter of the welded bars

e distance between the bars

t thickness of the web of a section or of a plate to be welded

t_{min} minimum thickness of the web of a section or of a plate to be welded

Figure 6 — Side lap joint on straight reinforcing steel bars

© ISO 2006 – All rights reserved

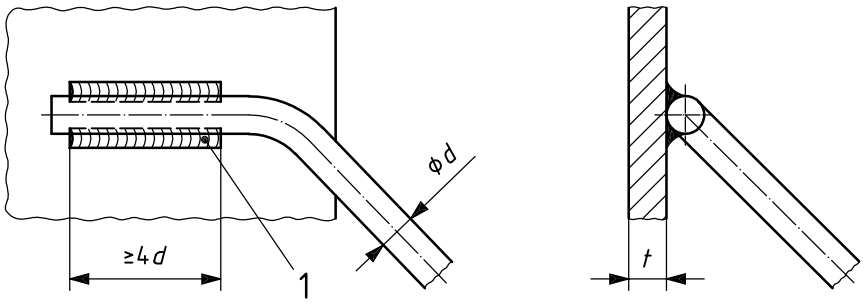

0,4 $d \leqslant t$, but min t = 4 mm

Key

1 weld

d nominal diameter of the welded bar

t thickness of the web of a section or of a plate to be welded

Figure 7 — Sided lap joints on bent reinforcing steel bar

For the thickness of the steel components, the weld length and the weld spacing, the dimensions of Figures 6 and 7 shall be observed.

For welding double-sided laps on bent reinforcing steel bars in accordance with Figure 7, the requirements of 13.2 also apply.

During assembly, sufficient access for welding shall be maintained.

Side lap welds shall be made as shown in Figure 8.

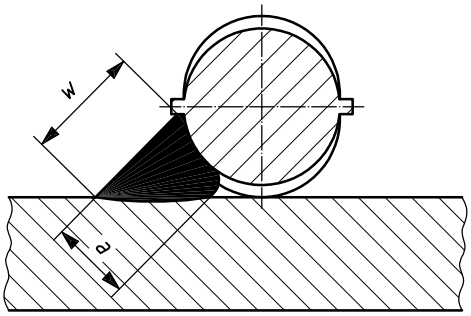

$a \approx 0{,}3\ d$, minimum 3 mm

Key

a throat thickness

w weld width

NOTE $a \approx 0{,}7 \times w$

Figure 8 — Weld configuration of side lap welds

6.6.2.2 Transverse end plate joints

Transverse end plate joints shall be welded in accordance with Figure 9.

© ISO 2006 – All rights reserved

Where several reinforcing steel bars are welded to a plate or section, the spacing between bars shall be at least 3d.

NOTE This type of joint can be used for the purposes of end anchorage.

For joints made by fillet welds with set-on bar, as shown in Figure 9 c), the end of the reinforcing steel bar shall be cut square to the bar axis. There should be no gap between the squared end of the reinforcing steel bar and the steel component. Laminations and lamellar tearing in the steel plate shall be avoided by the choice of a suitable parent material. The steel plate shall be controlled by testing or inspection, for example in accordance with EN 10164.

© ISO 2006 – All rights reserved

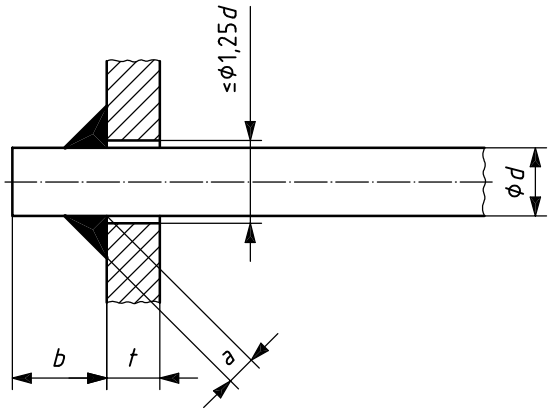

a = 0,4 d
$b \geqslant d$
0,4 $d \leqslant t$, but t_{min} = 4 mm

a) Set-through bar

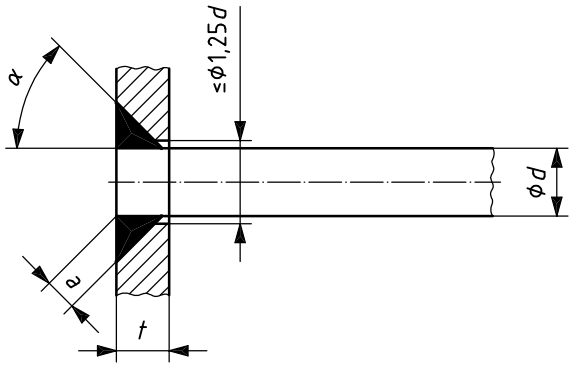

$\alpha \geqslant 45°$
a = 0,4 d
$t \geqslant d$

b) Set-in bar

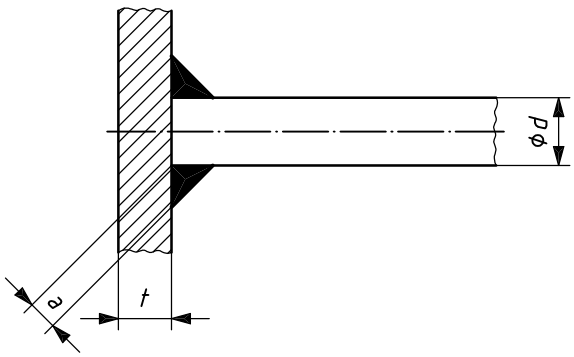

a = 0,4 d
0,4 $d \leqslant t$, but t_{min} = 4 mm
In case of a gap, the fillet weld size shall be increased by the dimension of the gap.

c) Set-on bar

Key

a	throat thickness	t	plate thickness
b	excess of the bar	t_{min}	minimum thickness of the web of a section or of a plate to be welded
d	nominal diameter of the welded bar	α	included angle

Figure 9 — Transverse end plate joint

© ISO 2006 – All rights reserved

7 Materials

7.1 Parent materials

7.1.1 Reinforcing steels

Weldable reinforcing steel and stainless reinforcing steel, in accordance with the relevant standards or technical specification, may be used. For refurbishment and extensions of buildings, the weldability of the existing reinforcing steel shall be verified.

7.1.2 Other types of steels

Other types of steels (weldable structural or stainless steels) may be welded to reinforcing steel. The delivery conditions of the steel shall be declared in the inspection certificate.

7.1.3 Inspection documents

For reinforcing steels, the inspection certificate does not need to be provided if the manufacturer of the reinforcing steel is certified to the relevant product standard for the market.

The carbon equivalent value (CEV), the manufacturing route and the delivery conditions shall be determined before welding.

This requirement for the CEV does not apply if:

a) the weldability is proven by a welding procedure test with a maximum CEV allowed in accordance with the relevant product standard, or

b) it can be proven that the steel delivered has an equal or lower CEV than the steel used in the welding procedure test.

For reinforcing and structural steels, the CEV shall be in accordance with the product standard, and shall be calculated in accordance with the following equation:

$$\mathrm{CEV} = \mathrm{C} + \frac{\mathrm{Mn}}{6} + \frac{\mathrm{Cr} + \mathrm{Mo} + \mathrm{V}}{5} + \frac{\mathrm{Ni} + \mathrm{Cu}}{15} \qquad (1)$$

7.2 Welding consumables

The welding consumables to be used shall be qualified in accordance with the relevant standard.

For load-bearing welded joints, the minimum yield strength of the welding consumables shall be at least 70 % of the yield strength of the reinforcing steel. For load-bearing butt welded joints, the yield strength of the welding consumables shall be equal to or greater than the yield strength of the reinforcing steel to be welded.

NOTE In some countries, welding consumables are designated in accordance with tensile strength.

8 Quality requirements

Manufacturers which perform shop- or site-welding of load-bearing welded joints with reinforcing steel shall fulfil the quality requirements specified in ISO 3834-3, as applicable, as well as the requirements of this part of ISO 17660 (see also Annex D).

 © ISO 2006 – All rights reserved

9 Welding personnel

9.1 Welding coordination

The manufacturer of welded reinforcing steel joints shall have at its disposal at least one welding coordinator conforming to the requirements of ISO 14731, with specific technical knowledge in the welding of reinforcing steel (see Annex B).

The welding coordination personnel shall be responsible for the quality of welded reinforcing steel joints in the workshop as well as on the site. The welding coordination personnel shall ensure that all welding is carried out in accordance with qualified welding procedure specifications and that it complies with ISO 15609-1, ISO 15609-2 or ISO 15609-5, as appropriate. The welding procedure specification shall be available for inspection at the workplace (see Clause 10).

The welding coordination personnel shall take remedial measures in cases of imperfections.

The welding coordination personnel may undertake welder qualification tests for those welders under their supervision during the welding of reinforcing steel (see Annex D). The welding coordination personnel may also issue and prolong welder qualification test certificates for the welding of reinforcing steel.

NOTE For the surveillance of the welding works, the welding coordinator can be assisted by employees of the manufacturer with sufficient welding training or experience. This does not affect the responsibility of the welding coordinator.

9.2 Welder and operator qualifications

9.2.1 Welders

For each welding process used in the workshop and on the site, the manufacturer shall have at its disposal a sufficient number of qualified welders with special training in the welding of reinforcing steels.

To perform load-bearing welded joints on reinforcing steel bars, the welder shall have a basic fillet weld qualification test, in accordance with ISO 9606-1 or equivalent. The welder shall have received additional training in the welding of relevant welded joints and shall have welded successfully. The number of test pieces shall be in accordance with Table 3, which shall cover the most critical welding conditions in production (e.g. dimensions, welding positions). The test pieces shall be evaluated as specified in Table 3 and the positive result shall be confirmed by the welding coordinator (see Annex E).

Table 3 — Number of test pieces and range of welder qualification

Joint	Number of test pieces	Range of qualification	Type of test for the test piece in accordance with this part of ISO 17660
Butt joint	3 [a]	butt joint	tensile test
Lap joint	3 [b]	lap joint, strap joint, other joints	tensile test
Strap joint	3 [c]	lap joint, strap joint, other joints	tensile test
Cross joint	3 [d]	cross joint	shear test, tensile test
Other joints	3 [e]	lap joint, strap joint, other joints	tensile test

[a] In accordance with Figure 1.
[b] In accordance with Figure 2.
[c] In accordance with Figure 3.
[d] In accordance with Figures 4 or 5.
[e] In accordance with Figures 7, 8, 9, or 10.

© ISO 2006 – All rights reserved

9.2.2 Welding operators and resistance weld setters

Welding operators and resistance weld setters of fully mechanized or automatic welding shall hold a valid operator qualification test certificate, in accordance with ISO 14732, carried out on reinforcing steel.

9.3 Validity of a welder qualification test

A welder qualified to weld reinforcing steel in accordance with 9.2.1 remains qualified within the range of the original qualification for two years. After this time, the welder shall re-qualify or the qualification may be prolonged. For prolongation of the welder qualification, additional records of production weld tests (see Clause 12), welded in the most difficult position, shall be documented (i.e. at least eight tests in a time period of 24 months, of which at least two tests shall originate from the previous six months).

The six-month confirmation and repeat test, in accordance with ISO 9606-1 or equivalent, is not necessary if the welder only welds reinforcing steel bars and the prolongation is attributed for the welding of reinforcing steel bars.

10 Welding procedure specification (WPS)

Welding procedures shall be prepared in accordance with ISO 15609-1, ISO 15609-2, ISO 15609-5 or ISO 15620, as appropriate. However, the WPS shall be supplemented with the additional essential parameters in Clause 11. Annex A provides an example of the WPS form.

11 Welding procedures

11.1 General

Prior to production welding, all welding procedures shall be qualified with a welding procedure test.

11.2 Test specimens

The test specimens may be chosen from Annex C, as appropriate. The dimensions shall be chosen from Table 5.

11.3 Examination and testing

The examination and testing shall be carried out in accordance with Table 4.

Table 4 — Examination and testing

Welding process	Type of welded joint	Number of test pieces		
		Tensile test	Bend test	Shear test
111 114 135 136	Butt joint	3	3	—
	Lap joint/Strap joint	3	—	—
	Cross joint	6[a]	3[b]	3[c]
	Other joints	3	—	—
21 23	Cross joint	6[a]	3[b]	3[c]
24 25 42 47	Butt joint	3	3	—

[a] 3 tensile tests are made on each bar if the diameters are different. In the case of equal diameters, only 3 tensile tests are necessary.

[b] The bend test on the thicker bar is only necessary when the weld zone is bent in production.

[c] The shear test on the bar shall be anchored.

 © ISO 2006 – All rights reserved

11.4 Acceptance criteria

The acceptance criteria for examination and testing shall meet the requirements given in Clause 14.

11.5 Range of qualification

11.5.1 Material

A welding procedure test carried out on one steel grade does not qualify for other steel grades.

The carbon equivalent for the material used in the welding procedure test qualifies materials with an equal or lower carbon equivalent, but not those with higher carbon equivalents.

11.5.2 Load-bearing/Non load-bearing

A welding procedure test carried out on load-bearing welded joints qualifies for non load-bearing welded joints, but not vice-versa.

11.5.3 Production route of reinforcing steel

A welding procedure test is restricted to the manufacturing process of the reinforcing steel used in the welding procedure test (see ISO 16020).

11.5.4 Diameter of reinforcing steel bar and material thickness

The range of qualification for the diameter of reinforcing steel bar and material thickness is given in Table 5.

Table 5 — Range of qualification for the diameter of reinforcing steel bar and material thickness

Dimensions in millimetres

Diameter and plate thickness used for the welding procedure test [a]		Range of qualification	
d/d		one nominal diameter up and down, provided that the bars are of the same diameter [b]	
d_{max}/d_{min} [c]		d_{max}/d_{min} [c]	
d_{max}/d_{max} d_{min}/d_{min}		all joints between d_{max}/d_{max} and d_{min}/d_{min} with equal diameter	
d_{max}/d_{max} d_{min}/d_{min} d_{max}/d_{min} [c,d]		all combinations of dimensions from d_{min} to d_{max}	
Joints with other steel components [e]			
Steel bar	**Material thickness**	**Steel bar**	**Material thickness**
d_{max} and d_{min}	$4 < t < 30$	$d_{min} \leqslant d \leqslant d_{max}$	$0{,}5t$ [f] to $1{,}2t$
	$t \geqslant 30$		≥ 5

[a] For test pieces containing different diameters, both diameters shall be tested.

[b] Diameters > 32 mm shall be tested separately.

[c] Does not apply for welding processes 24, 25 and 47 (see 6.2.2).

[d] For the combination d_{max}/d_{min}, different diameters as for the qualification d_{max}/d_{max} and d_{min}/d_{min} may be used. The range of qualification is given by the diameter ratio used. Examples of typical diameter combinations for welding cross joints using welding processes 21 and 23 are shown in Annex H.

[e] See Figures 6, 7, 8 and 9.

[f] $0{,}5t$ is a minimum of 4 mm.

© ISO 2006 – All rights reserved

11.5.5 Transverse end plate joints

Transverse end plate joints in accordance with Figure 9c) cover transverse end plate joints in accordance with Figure 9a).

11.5.6 Other essential variables

The range of qualification for other essential variables shall meet the requirements of the appropriate International Standards for procedure qualification for different welding processes, in accordance with Table 6.

Table 6 — Appropriate International Standards for different welding processes

Welding process	Appropriate International Standard
Arc welding (111, 114, 135, 136)	ISO 15614-1 [a]
Spot and projection welding (21, 23)	ISO 15614-12
Resistance butt and flash welding (24, 25)	ISO 15614-13
Friction welding (42)	ISO 15620

[a] The requirements concerning heat input may be neglected for cross welds.

11.6 Validity

The validity of the welding procedure test is unlimited, providing that it is confirmed by production weld tests. If there is an interruption in the production work for a period of more than 12 months, the welding procedure test shall be renewed by a production test (see Clause 12).

12 Production weld test

A production weld test shall be carried out to ensure that under the local fabrication conditions, in the workshop or on site, the same quality of weld can be produced in accordance with the welding procedure qualification. The numbers of test pieces are given in Table 7. Table 7 shall be fulfilled by each welder and for each WPQR. The production weld tests shall be welded by all welders involved in the most difficult position of production.

In the case of continuous production using the same qualified welding procedure in work shops, the time period between production weld tests shall be defined and shall not exceed three months. In other cases, and on site, one test series is required at the start of each contract and then every month.

© ISO 2006 – All rights reserved

Table 7 — Number of test pieces for the production weld test

Number of welding process	Type of welded joint	Number of test pieces		
		Tensile test	Bend test	Shear test
111 114 135 136	Butt joint	1	1	—
	Lap joint/Strap joint	1	—	—
	Cross joint	1 [a]	1 [b]	3 [c]
	Other joints	1	—	—
21 23	Lap joint	1	—	—
	Cross joint	2 [a]	1 [b]	3 [c]
24 25 42 47	Butt joint	1	1	—
42	Other joints	1	—	—

[a] One tensile test is made on each bar if the diameters are different. In the case of equal diameters, only one tensile test is necessary.

[b] The bend test on the thicker bar is only necessary when the weld zone is bent in production.

[c] The shear test on the bar shall be anchored.

The test specimens shall be welded and examined in accordance with the requirements of Clause 14 (for an example of a WPQR form, see Annex E). If one test specimen fails, two additional similar test pieces shall be welded and tested. Both additional test pieces shall fulfil the requirements of Clause 14. If one of these additional test pieces fails, the production weld test fails.

If the production weld test fails, the welders involved shall be trained sufficiently before the production weld test is repeated. Only after a successful result of a production weld test may welding commence. Additional appropriate actions shall be taken, and records of such actions shall be maintained.

The results of the production weld tests shall be recorded in the production log (see Clause 15). The production log shall be retained for at least five years.

13 Execution and inspection of production welding of reinforcing steel

13.1 General

Each weld shall be visually inspected. For welded joints in reinforcing steel made by arc-welding processes, the quality level C applies for surface imperfections, as appropriate, in accordance with ISO 5817. For other processes, acceptance criteria apply in accordance with the relevant standard for procedures.

NOTE 1 To avoid loss of strength, it is advisable that the heat input be limited when using specific types of reinforcing steels, e.g. cold-worked or quenched and self-tempered steels.

Welder and welds shall be suitably protected against environmental factors, such as wind, rain and snow.

In addition, dirt, grease, oil, moisture, rust, loose scale, and paint shall be removed from the area to be welded.

Whenever the welding conditions, e.g. high cooling rate, temperature less than 0°C, may affect the weldability, suitable measures shall be defined in the welding procedure specification (WPS). If using welding processes 135 and 136, the weld areas should be protected against wind and air movements.

NOTE 2 For diameters > 40 mm, it is sometimes necessary to determine the preheating temperature in accordance with ISO/TR 17671-2.

© ISO 2006 – All rights reserved

Welding shall only be done in accordance with qualified welding procedure specifications, which shall be present at the workplace.

Welds of reinforcing steel shall only be welded by welders and operators with a valid qualification for the type of joint to be welded (see 9.2).

13.2 Welding of bent reinforcing steel bars

Bending of reinforcing steel bars should be carried out before welding.

Since the heat input from welding may alter the mechanical properties of the bent reinforcing steel, the distance from the weld to the start of the bend in the case of butt joints shall be not less than 2 d (see Figure 10). In the case of lap joints and strap joints, the distance shall not be less than 1 d.

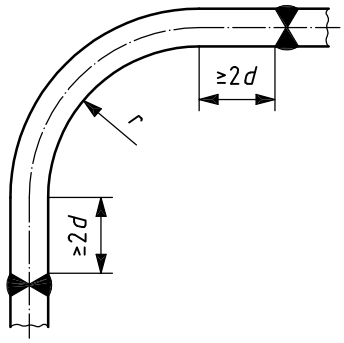

Key

d nominal diameter of the welded bar

r radius of bent reinforcing steel bar

Figure 10 — Butt joints on bent reinforcing steel bars

For cross joints, welds may be placed in the bends in accordance with Figure 11, either on the inside or on the outside of the bend.

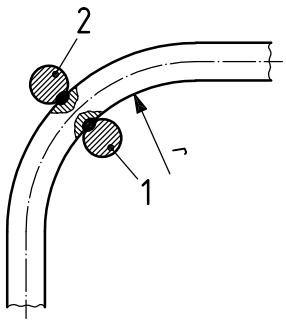

Key

1 cross joint inside the bend

2 cross joint outside the bend

r radius of bent reinforcing steel bar

Figure 11 — Cross joints in bends

NOTE In cases where welding is carried out before bending, it is advisable to take into account special design requirements for mandrel diameters.

© ISO 2006 – All rights reserved

13.3 Welds made by welding processes 21 and 23

Welding equipment with synchronous control shall be used.

The welding equipment shall be capable of providing a welding current, welding times and electrode force that are reproducible. Shaped electrodes shall be used unless otherwise specified.

The welding parameters shall be set in accordance with the appropriate WPS before welding.

13.4 Welds made by welding processes 24 and 25

Welding equipment shall be used with an electrical rating suitable for the welding job concerned. The welding equipment shall develop the necessary forming and clamping forces. The types and the power of the welding equipment shall be similar to those which have been used for the welding procedure test.

Where voltage fluctuations could occur, suitable measures for maintaining constant secondary power shall be taken.

Accelerated cooling shall not be used.

13.5 Welds made by welding process 42

See ISO 15620.

13.6 Welds made by welding process 47

Welding machines with hydraulic upsetting shall be used. The welding machines shall be adequately designed with respect to blowpipe size, upsetting force, upsetting travel, upsetting rate and clamping force exerted by the jaws, and the constancy of the welding parameters shall be ensured. Devices for measuring the hydraulic upset pressure shall be provided.

14 Examination and testing of test specimens

14.1 General

Test specimens shall be welded in accordance with the relevant welding procedure specification.

All test pieces shall be visually inspected prior to testing. For welded joints in reinforcing steel made by arc-welding processes, only those test specimens that have met the requirements of quality level C for surface imperfections, as appropriate, in accordance with ISO 5817, shall be subject to further mechanical testing. For other processes, acceptance criteria in accordance with the relevant standard for procedures apply.

All mechanical tests shall be conducted in accordance with ISO 15630-1 for tensile and bend tests, and in accordance with ISO 15630-2 for shear and bend tests, unless otherwise specified in 14.2 to 14.4.

14.2 Tensile test

14.2.1 Test specimen

The tensile test shall be carried out on the as-welded test specimen and, where practicable, the location of the weld shall be positioned approximately in the centre of the test specimen.

Recommended test specimens are given in Annex C.

Where a standard tensile test specimen cannot be prepared, e.g. a steel section to a bar joint, the test specimen shall be agreed between the welding coordinator and the test laboratory. For test specimens

© ISO 2006 – All rights reserved

consisting of bars joined to other steel components, care shall be taken to ensure that the load-bearing capacity of the steel component is equal to or greater than the required load-bearing capacity of the joint.

14.2.2 Test procedure

When testing transverse end plate joint test specimens, the hole in the support plates shall be selected so that the pressure pad does not touch the weld metal. Where the pressure pad is applied on the opposite side to the weld metal, the hole in the pressure pad shall be as close as practicable to the hole in the test specimen.

Where the test specimen configuration makes it impossible to perform a standard tensile test, the exact testing procedure used shall be agreed between the welding coordinator and the test laboratory.

14.2.3 Evaluation of results

The fracture surface of the weld shall not contain any imperfections larger than the requirements of quality level C, as appropriate, in accordance with ISO 5817.

If not specified otherwise, the following requirements shall be met:

$$F_{max} \geqslant A_n \cdot R_m \qquad (2)$$

where

F_{max} is the maximum tensile force, in N;

A_n is the nominal cross-sectional area of the bar, in mm^2;

R_m is the nominal tensile strength of the bar, in N/mm^2.

NOTE For a joint carrying a specified load, F_{max} is equal to or greater than the specified value of the load, as defined when qualifying the welding procedure in relation with the design specification for the joint concerned.

If R_m is not specified for the parent material, the value of R_m shall be taken as the specified characteristic yield strength R_e of the bar multiplied by the specified characteristic R_m/R_e ratio.

Other mechanical properties, e.g. A_{gt}, measured outside the weld area, may be required and measured, depending on the material standard being used or the design specification.

14.2.4 Report of results

The following shall be reported as the results of the test, as appropriate:

a) the welding procedure specification used;

b) the type of test specimen and its dimensions;

c) the maximum tensile force achieved, in kN;

d) the location of the fracture;

e) the type and location of any imperfection on the fracture surface;

f) the type and location of any imperfection identified during the visual inspection;

g) the elongation achieved, in % (if required).

The report shall clearly state whether or not the requirements of this part of ISO 17660 have been met.

 © ISO 2006 – All rights reserved

14.3 Shear test

14.3.1 Test specimen

The test specimen shall be in accordance with Annex C for the type of weld being tested.

14.3.2 Test procedure

The test procedure shall be in accordance with ISO 15630-2.

14.3.3 Evaluation of results

The shear force shall meet the following condition:

$$F_s \geqslant S_f \cdot A_s \cdot R_e \quad (3)$$

where

F_s is the shear force, in N;

S_f is the shear factor, in % (see Annex G for values);

A_s is the nominal cross-sectional area of the bar to be anchored, in mm^2;

R_e is the specified characteristic yield strength of the reinforcing steel, in N/mm^2.

The shear factor indicates the required strength of the joint (see 6.5.1).

14.3.4 Report of results

The following shall be reported as the results of the test, as appropriate:

a) the welding procedure specification;

b) the type of test specimen and its dimensions;

c) the shear strength, in kN;

d) the location of the fracture;

e) the type and location of any imperfection on the fracture surface;

f) the type and location of any imperfection identified during the visual inspection.

The report shall clearly state whether or not the requirements of this part of ISO 17660 have been met.

14.4 Bend test

14.4.1 Test specimen

The length of the test specimen shall be in accordance with Annex C. The weld or the welded cross bar shall be located approximately in the centre of the test specimen.

© ISO 2006 – All rights reserved

14.4.2 Test procedure

Test specimens shall be bent on machines which impart a continuous bending action.

In the case of butt welds, the excess weld metal that would contact the bending former may be removed, or the profile of the bending former adjusted to accommodate the excess weld metal. The bending machine formers shall rotate freely and soft liners may be used to prevent crushing.

The test specimen shall be bent through at least 60° during the bend test, using a mandrel diameter equal to the values in Table 8.

Table 8 — Mandrel diameters for bend test

Dimensions in millimetres

Diameter range for reinforcing steel bar	Diameter of mandrel in bend test
$d \leqslant 8$	5 d
$8 < d \leqslant 12$	6 d
$12 < d \leqslant 20$	8 d
$20 < d \leqslant 32$	10 d
$d > 32$	12 d

14.4.3 Evaluation of results

The bent sample shall be visually inspected. There shall be no cracks visible without magnification on the surface of the bar. Partial detachment of welds of a cross joint may occur along the surface of the bar, if the bar material remains ductile.

14.4.4 Reporting of results

The following shall be reported as the results of the test, as appropriate:

a) the welding procedure specification;

b) the type of test specimen and its dimensions;

c) the location of the fracture;

d) the type and location of any imperfection on the fracture surface;

e) the type and location of any imperfection identified during the visual inspection.

The report shall clearly state whether or not the requirements of this part of ISO 17660 have been met.

15 Production log

The manufacturer shall keep a record of production monitoring, known as a production log, which records the WPQR, the results of all production tests (routine and pre-production tests) and all important production data. The manufacturer shall keep a different log for each welding process and the log shall be maintained at the workplace. Annex F is an example form and should be used where appropriate.

 © ISO 2006 – All rights reserved

Annex A
(informative)

Welding procedure specification (WPS) for welding processes 111, 114, 135 and 136

Manufacturer:

WPS No.: based on WPQR No.:

Qualification test of welder:

Welding task ISO 17660 Tab. 1 and/or Tab. 2 Shear factor S_f:.....

Welding process:

Type of weld: FW ☐ BW ☐ Figure ... ISO 17660

Semi-finished product:

Type of material:

Dimensions: t_1 = t_2 = D t/dimension:

Welding position: _____

Position of bar: _____

Grade of reinforcing steel

Grade of other material

Production route

Maximum CEV of reinforcing steel

© ISO 2006 – All rights reserved

Joint preparation, welding sequence

Dimensions of test piece (Figure .....)	Joint preparation (only BW) Figure 1 – 17660 a to d	Welding sequence, Weld geometry (Figure .....)
Cleaning of weld groove:		

Welding details

Welding run	Type of electrode	Electrode diameter	Welding current-polarity	Welding current

Type of electrode/wire: _____

Shielding gas: _____

Preparation of rod electrode:

Preheating:

Tack welding:

Restarts during welding: (at least ones in the root and capping run)

Repairs: only with permission of the examiner

Accepted weld imperfections: Quality level C, ISO 5817 for weld dimensions, external imperfections
Quality level C, ISO 5817 internal and external imperfections

.....	.....	.....
Location	Date	Manufacturer Name and signature

© ISO 2006 – All rights reserved

Annex B
(informative)

Technical knowledge of welding coordinator for welding reinforcing steel

The technical knowledge of a welding coordinator for welding reinforcing steel may be attained through:

— a special course, in accordance with EWF 544-01, or

— national training programmes, or

— manufacturing experience (see ISO 14731:—, 6.1).

© ISO 2006 – All rights reserved

Annex C
(informative)

Test specimens

C.1 General

Dimensions given in Figures C.1 to C.9 are recommended. The actual dimensions of test specimens should be confirmed with the test laboratory.

C.2 Test specimens

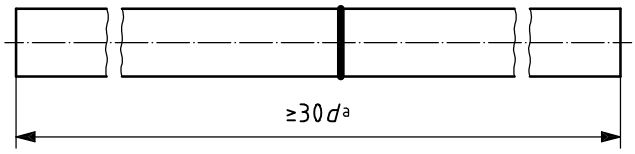

a L_{min} = 300 mm.

Figure C.1 — Test specimen for butt joint (tensile and bend test)

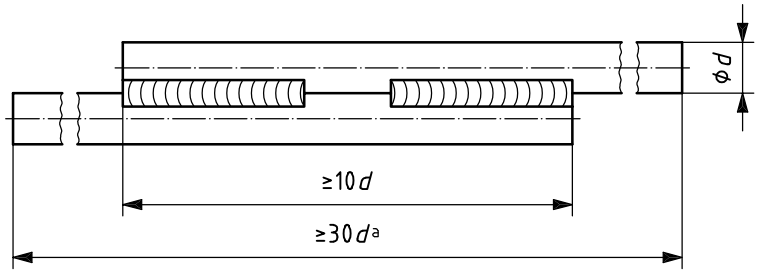

a L_{min} = 300 mm.

NOTE It can be necessary to bend the end of the test specimen to be aligned with one axis.

Figure C.2 — Test specimen for lap joint (tensile test)

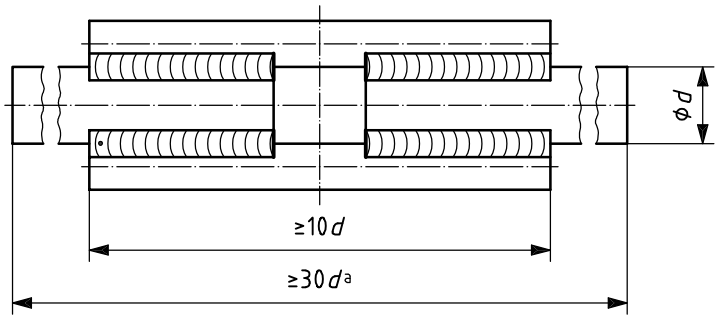

a L_{min} = 300 mm

Figure C.3 — Test specimen for strap joint (tensile test)

© ISO 2006 – All rights reserved

Dimensions in millimetres

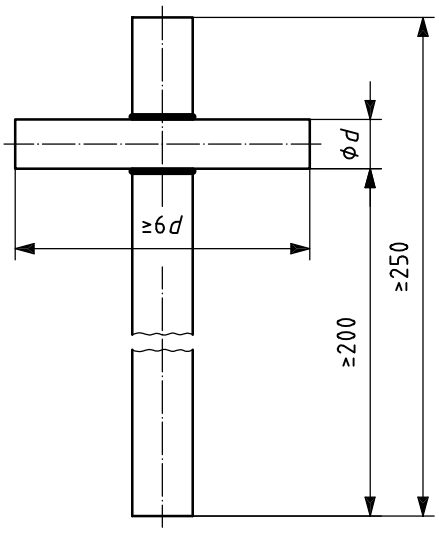

NOTE For testing purposes after welding, the length of the cross bar can be reduced to the diameter of the main bar.

Figure C.4 — Test specimen for cross joints (shear test)

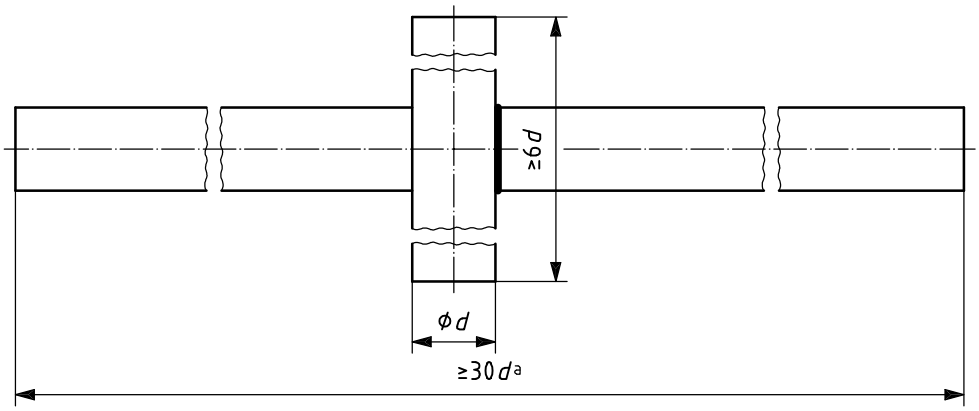

[a] L_{min} = 300 mm

NOTE For testing purposes after welding, the length of the cross bar can be reduced to the diameter of the main bar.

Figure C.5 — Test specimen for cross joints (bend test and tensile test)

© ISO 2006 – All rights reserved

Dimensions in millimetres

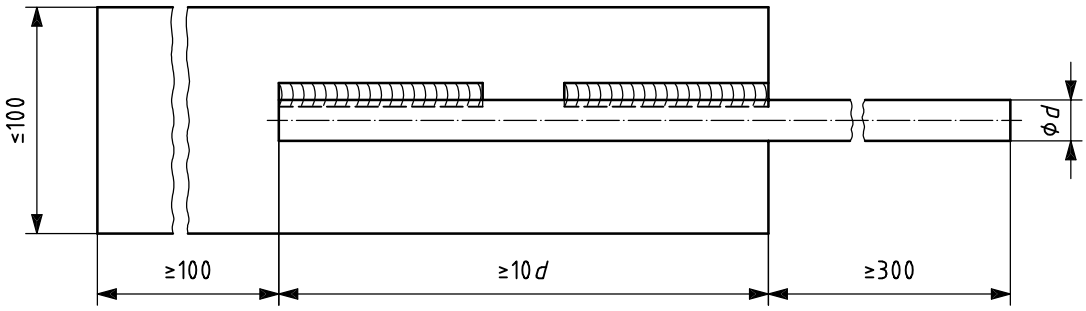

Figure C.6 — Test specimen for tensile test for other joints (single-sided lap welds)

Dimensions in millimetres

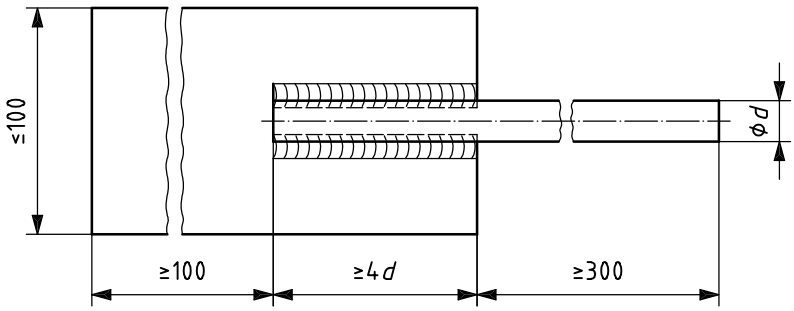

Figure C.7 — Test specimen for tensile test for other joints (double-sided lap welds)

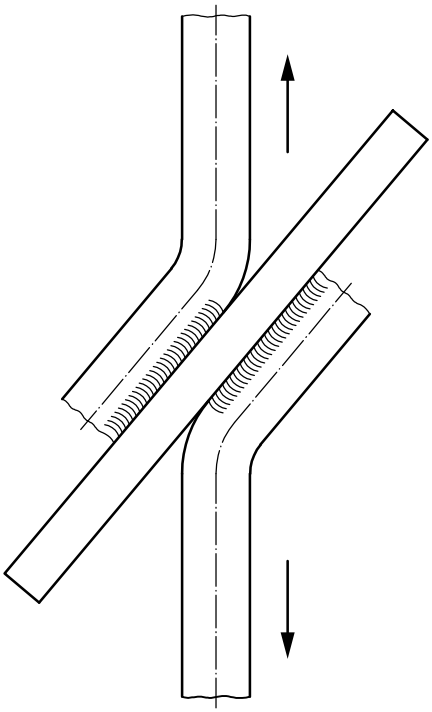

Figure C.8 — Test specimen for tensile test for other joints (double-sided lap welds on bent reinforcing steel)

© ISO 2006 – All rights reserved

Dimensions in millimetres

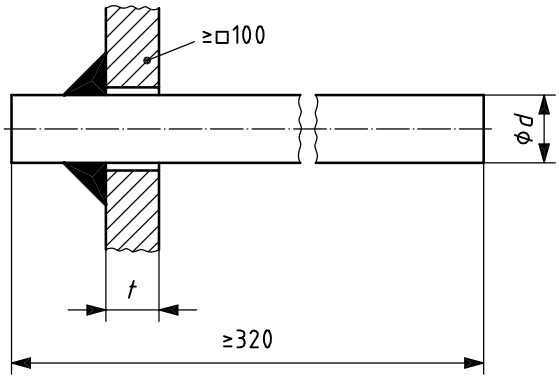

0,4 $d \leqslant t$, but t_{min} = 4 mm

a) Set-through bar

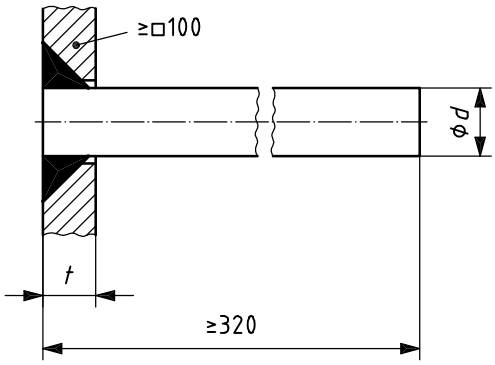

$d \leqslant t$

b) Set-in bar

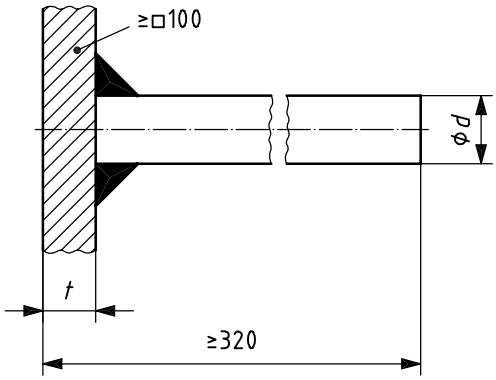

0,4 $d \leqslant t$, but t_{min} = 4 mm

c) Set-on bar

NOTE Length and width of the plate are in accordance with the actual component, except when different dimensions are necessary for testing reasons.

Figure C.9 — Test specimen for tensile test for transverse end plate joints

© ISO 2006 – All rights reserved

Annex D
(informative)

Assessment of the manufacturer performing welding

The assessment of a manufacturer may be done, as applicable:

— by the independent quality assurance department of the firm, or

— by the customer, or

— by a certification body accredited to carry out certification against ISO 3834-3 (and with experience in the assessment of welding reinforcing steel).

The technical equipment should fulfil the requirements of ISO 3834-3. It shall be checked by an audit. The welding coordinators should prove their technical knowledge on welding reinforcing steel, and should prove their ability to detect and evaluate correctly imperfections in welded reinforcing steel joints. The welding coordinators shall also prove during the audit that they are able to carry out and evaluate welder qualification tests for welding reinforcing steel. Weld test pieces in accordance with Clause 6 should therefore be welded during the audit, and tested.

After a successful audit, the manufacturer may receive a certificate for the workshop/site assessed.

The validity of the certificate should be for a maximum period of three years, and may be extended for a further three-year period if a re-audit of the manufacturer is carried out successfully. The certificate will lose its validity when the requirements upon which the issue of the certificate was based are no longer valid.

If a manufacturer wishes to change the scope of qualification of the certificate during the period of validity, an appropriate assessment of the manufacturer is necessary.

© ISO 2006 – All rights reserved

Annex E
(informative)

Evaluation of testing of welded joints

Test report number:	Welding procedure test: ☐	Page ..... of .....
Manufacturer:	Production weld test: ☐	Date of welding:
Location (workshop or on the site):	Welder qualification test: ☐	Date of testing:

Welding coordinator (name):	Welder (name):	Welding process:
		Filler designation:

Test piece number	Test piece, as per figure	Welding position, in accordance with ISO 6947	Steel grade	Test piece diameter or thickness mm	Throat thickness mm	Quality level of surface imperfections, in accordance with ISO 5817	Ultimate force N	Fracture area mm^2	Tensile strength N/mm^2	Shear factor	Bend angle °	Location of fracture	Quality level of internal imperfections in fracture area, in accordance with ISO 5817	Remarks	Result a = accepted na = not accepted

.....

Manufacturer (name, date and signature)

.....

Examiner or examining body (name, date and signature)

© ISO 2006 – All rights reserved

Annex F
(informative)

Example for production log

Manufacturer: .....

Location of welding (workshop or on the site): .....

Welding process:.....

Table F.1 — Necessary information to be given

Date of welding	Shift number	Type of welded joint	WPS-number	Project number/ Drawing number/ Position number	Dimensions (bar diameter/ plate thickness)	Number of welds	Result of examination	Non-conformity and corrective actions	Name and signature of welding coordination personnel

© ISO 2006 – All rights reserved

Annex G
(informative)

Classification of shear strength of load-bearing cross joints

The shear strength of the load-bearing welded cross joint can be classified on the basis of the nominal shear strength of the joint, relative to the nominal yield strength of the loaded bar, in accordance with Table G.1.

Table G.1 — Shear strength classification of load-bearing cross joints

Shear factor class	Shear factor S_f
SF30	⩾ 30 %
SF40	⩾ 40 %
SF50	⩾ 50 %
SF60	⩾ 60 %
SF70	⩾ 70 %
SF80	⩾ 80 %

NOTE Shear factor classes lower than SF30 or higher than SF80 are not recommended for use in design.

The minimum value of the shear factor may be indicated in drawings in accordance with Figure G.1.

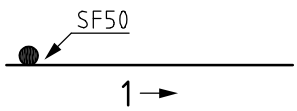

Key

1 anchoring direction

Figure G.1 — Example of a presentation of a cross joint in a drawing

© ISO 2006 – All rights reserved

Annex H
(informative)

Examples of diameter combinations for welding cross joints using welding processes 21 and 23

Table H.1 — Examples of diameter combinations for welding cross joints with welding processes 21 and 23

Dimensions in millimetres

Diameter of bar 2	Diameter of bar 1								
	8	10	12	14	16	20	25	32	40
8	—	X	X	X	X	X	—	—	—
10	X	X	X	X	X	X	X	—	—
12	X	X	X	X	X	X	X	—	—
14	X	X	X	X	X	X	X	X	—
16	X	X	X	X	X	X	X	X	X
20	X	X	X	X	X	X	X	X	X
25	—	X	X	X	X	X	X	X	X
32	—	—	—	X	X	X	X	—	—
40	—	—	—	—	X	X	X	—	—

NOTE The above is an example of range of couples of diameters covered by a qualification, for which tests were performed on the following couples of diameters:

— d_{min}/d_{min}: 8 mm × 10 mm

— d_{max}/d_{max}: 40 mm × 25 mm

— d_{min}/d_{max}: 10 mm × 25 mm (minimum ratio d_{min}/d_{max} is 0,4)

© ISO 2006 – All rights reserved

Bibliography

[1] ISO 4063, *Welding and allied processes — Nomenclature of processes and reference numbers*

[2] ISO 6947, *Welds — Working positions — Definitions of angles of slope and rotation*

[3] ISO 17660-2, *Welding — Welding of reinforcing steel — Prart 2: Non load-bearing welded joints*

[4] ISO/TR 17671-2[3)], *Welding — Recommendations for welding of metallic materials — Part 2: Arc welding of ferritic steels*

[5] EWF 544-01, *Special course for welding reinforcing bars at the specialist level*

3) Equivalent to EN 1011-2.

© ISO 2006 – All rights reserved

ICS 25.160.10

Price based on 37 pages

© ISO 2006 – All rights reserved