ICS: 91.100.30

Geregistreerde Belgische norm

NBN EN 12390-7

1e uitg., april 2001

Normklasse : B 15

Beproeving van verhard beton - Deel 7 : Dichtheid van verhard beton

Essai pour béton durci - Partie 7 : Masse volumique du béton durci

Testing hardened concrete - Part 7: Density of hardened concrete

Toelating tot publicatie : 14 december 2000

Deze norm is een deel van een pakket van Europese normen waarvan de nationale implementatie later zal plaatsvinden.

Deze Europese norm EN 12390-7: 2000 heeft de status van een Belgische norm.

Deze Europese norm bestaat in drie officiële versies (Duits, Engels, Frans).

Belgisch instituut voor normalisatie (BIN) , vereniging zonder winstoogmerk
Brabançonnelaan 29 - 1000 BRUSSEL - telefoon: 02 738 01 12 - fax: 02 733 42 64
e-mail: info@bin.be - BIN Online: www.bin.be - prk. 000-0063310-66

© BIN 2001

Prijsgroep : 11

EUROPEAN STANDARD

NORME EUROPÉENNE

EUROPÄISCHE NORM

EN 12390-7

October 2000

ICS 91.100.30

English version

Testing hardened concrete - Part 7: Density of hardened concrete

Essai pour béton durci - Partie 7: Masse volumique du béton durci

Prüfung von Festbeton - Teil 7: Dichte von Festbeton

This European Standard was approved by CEN on 18 February 2000.

CEN members are bound to comply with the CEN/CENELEC Internal Regulations which stipulate the conditions for giving this European Standard the status of a national standard without any alteration. Up-to-date lists and bibliographical references concerning such national standards may be obtained on application to the Management Centre or to any CEN member.

This European Standard exists in three official versions (English, French, German). A version in any other language made by translation under the responsibility of a CEN member into its own language and notified to the Management Centre has the same status as the official versions.

CEN members are the national standards bodies of Austria, Belgium, Czech Republic, Denmark, Finland, France, Germany, Greece, Iceland, Ireland, Italy, Luxembourg, Netherlands, Norway, Portugal, Spain, Sweden, Switzerland and United Kingdom.

EUROPEAN COMMITTEE FOR STANDARDIZATION
COMITÉ EUROPÉEN DE NORMALISATION
EUROPÄISCHES KOMITEE FÜR NORMUNG

Management Centre: rue de Stassart, 36 B-1050 Brussels

© 2000 CEN All rights of exploitation in any form and by any means reserved worldwide for CEN national Members.

Ref. No. EN 12390-7:2000 E

Contents

Page

Foreword 3

1 Scope 3

2 Normative references 4

3 Apparatus 4

4 Test Specimens 4

5 Procedure 4

6 Test result 7

7 Test report 7

8 Precision 8

Figure 1 - Typical stirrup arrangement for the determination of the volume of concrete specimens by water displacement 8

Table 1 - Precision data for measurements of the saturated density of hardened concrete 8

Foreword

This European Standard has been prepared by Technical Committee CEN/TC 104 "Concrete (performance, production, placing and compliance criteria)", the secretariat of which is held by DIN.

This European Standard shall be given the status of a national standard, either by publication of an identical text or by endorsement, at the latest by April 2001, and conflicting national standards shall be withdrawn at the latest by December 2003.

According to the CEN/CENELEC Internal Regulations, the national standards organizations of the following countries are bound to implement this European Standard: Austria, Belgium, Czech Republic, Denmark, Finland, France, Germany, Greece, Iceland, Ireland, Italy, Luxembourg, Netherlands, Norway, Portugal, Spain, Sweden, Switzerland and the United Kingdom.

This standard is one of a series of methods for testing concrete.

It is based on the International Standard ISO 6275 - Concrete, hardened - Determination of density.

A draft for this standard was published in 1996 for CEN enquiry as prEN 12363. It was one of a series of individually numbered test methods for fresh or hardened concrete. For convenience it has now been decided to combine these separate draft standards into three new standards with separate parts for each method, as follows:

- Testing fresh concrete (EN 12350)

- Testing hardened concrete (EN 12390)

- Testing concrete in structures (EN 12504)

The series EN 12390 includes the following parts where the brackets give the numbers under which particular test methods were published for CEN enquiry:

EN 12390 Testing hardened concrete

Part 1: Shape, dimensions and other requirements of specimens and moulds (former prEN 12356 : 1996)
Part 2: Making and curing specimens for strength tests (former prEN 12379 : 1996)
Part 3: Compressive strength of test specimens (former prEN 12394 : 1996)
Part 4: Compressive strength - Specification for testing machines (former prEN 12390 : 1996)
Part 5: Flexural strength of test specimens (former prEN 12359 : 1996)
Part 6: Tensile splitting strength of test specimens (former prEN 12362 : 1996)
Part 7: Density of hardened concrete (former prEN 12363 : 1996)
Part 8: Depth of penetration of water under pressure (former prEN 12364 : 1996)

1 Scope

This standard specifies a method for determining the density of hardened concrete.

It is applicable to lightweight, normal-weight and heavy-weight concrete.

It differentiates between hardened concrete in the following states:

– as-received;
– water saturated;
– oven-dried.

The mass and the volume of the specimen of hardened concrete are determined and the density calculated.

2 Normative references

This European Standard incorporates by dated or undated reference, provisions from other publications. These normative references are cited at the appropriate places in the text and the publications are listed hereafter. For dated references, subsequent amendments to or revisions of any of these publications apply to this European Standard only when incorporated in it by amendment or revision. For undated references the latest edition of the publication referred to applies (including amendments).

EN 12390-1, *Testing hardened concrete – Part 1: Shape, dimensions and other requirements of specimens and moulds.*

ISO 5725-1, *Accuracy (trueness and precision) of measurement methods and results - Part 1: General principles and definitions.*

3 Apparatus

3.1 Callipers and rules, capable of determining the dimensions of a specimen to within ± 0,5 %.

3.2 Balance, equipped with a stirrup for weighing the specimen in both air and water to an accuracy of 0,1 % of the mass.

3.3 Water tank, fitted with a device to maintain the water at a constant level and of sufficient size to allow the specimen on the stirrup to be fully immersed to a constant depth.

3.4 Ventilated oven, in which the temperature is capable of being controlled at (105 ± 5) °C.

NOTE The apparatus required depends upon the method selected for determining the volume of the specimen.

4 Test specimens

The minimum volume of a specimen shall be 1 l. If the nominal maximum aggregate size of specimens cast in moulds exceeds 25 mm, the minimum volume shall be not less than 50 D^3, where D is the nominal maximum size of the coarse aggregate.

Normally, the entire specimen as received shall be used for the determination. If the shape or size of a specimen is such that it is not possible to use all of it, a smaller specimen may be broken or sawn from the original.

Capped specimens shall not be used.

5 Procedures

5.1 General

5.1.1 Determination of mass

The standard recognizes three conditions under which the mass of a specimen can be determined:

a) as-received;

b) water saturated;

c) oven-dried.

5.1.2 Determination of volume

The standard recognizes three methods for determining the volume of the specimen:

a) by water displacement (reference method);

b) by calculation using actual measurements;

c) for cubes, by calculation, using checked, designated dimensions.

NOTE 1 The precision of the method depends on the method selected for measuring the volume of the specimen. Measurement of volume by the water-displacement method is the most precise, followed by calculation using measurement of actual dimensions and lastly calculation using checked, designated, dimensions.

NOTE 2 The limitation to cubes in 5.1.2 c) of using designated dimensions in calculation of volume is due to the greater tolerance on length, according to EN 12390-1, of other specimen shapes.

5.2 Mass of as-received specimen

Weigh the as-received specimen (m_r), to an accuracy of 0,1 % of the mass of the specimen. Record the value indicated, in kilograms.

5.3 Mass of water saturated specimen

Immerse the specimen in water at (20 ± 2) °C until the mass changes by less than 0,2 % in 24 h, wiping the surplus water from the surface before each weighing. Record the value of the saturated mass (m_s), in kilograms.

NOTE Specimens of concrete cured in water for at least 72 h prior to testing, may be assumed to be saturated to a constant mass.

5.4 Mass of oven-dried specimen

Dry the specimen in a ventilated oven at (105 ± 5) °C until the mass changes by less than 0,2 % in 24 h. Before each weighing, cool the specimen to near room temperature in a dry airtight vessel or desiccator. Record the value of the oven-dried mass (m_o) as indicated, in kilograms.

5.5 Volume obtained by water displacement

5.5.1 General

Ensure that the specimen is in a saturated condition.

NOTE 1 This method is suitable for specimens of all shapes and is the only method suitable for specimens of irregular shape.

NOTE 2 This method is normally unsuitable for specimens of no-fines concrete, lightweight aggregate concrete with large pores, or specimens whose moisture content must not to be altered. However, the application of a thin water impermeable layer can make this method practicable.

5.5.2 Mass in water

Determine the mass of the specimen in water according to the following procedure:

Raise the water tank until the stirrup, without a specimen, is immersed in the water tank and not touching the bottom of the tank. Record the apparent mass of the stirrup (m_{st}), in kilograms.

NOTE 1 The apparent mass of the stirrup may alternatively be allowed for using a zero setting facility on the balance. (tareing).

Place the specimen in the stirrup and raise the water tank until the specimen is submerged and the water level on the stirrup is the same as it was without the specimen.

NOTE 2 Trapping of air bubbles on the sides of the specimen and on the stirrup should be avoided.

Record the apparent mass (m_{st} + m_w), in kilograms, of the immersed specimen and stirrup.

5.5.3 Mass in air

Determine the mass of the specimen in air according to the following procedure:

Remove the specimen from the stirrup and wipe the surplus water from the surfaces, using a damp cloth. Place the specimen on the balance and record the mass of the specimen in air (m_a) in kilograms.

5.5.4 Calculate the volume of the specimen

Calculate the volume of the specimen, using the formula :

$$V = \frac{m_a - [(m_{st} + m_w) - m_{st}]}{\rho_w}$$

where:

V is the volume of the specimen, in cubic metres;

m_a is the mass of the specimen in air, in kilograms;

m_{st} is the apparent mass of the immersed stirrup, in kilograms;

m_w is the apparent mass of the immersed specimen, in kilograms;

ρ_w is the density of water, at 20 °C, taken as 998 kg/m³.

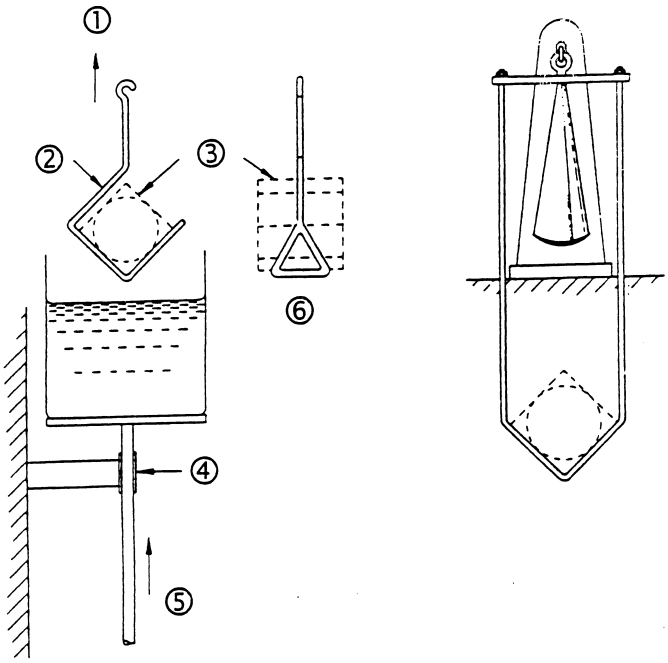

a) Stirrup suspeded beneath balance mechanism

b) Alternative form of stirrup suspended above balance mechanism

Key
1 Balance
2 Stirrup
3 Concrete specimen
4 Guide
5 Water tank is moved vertically
6 Side view of stirrup

Figure 1 - Typical stirrup arrangement for the determination of the volume of concrete specimens by water displacement

5.5.4 Volume obtained by measurement

Calculate the volume of the specimen from measurements made on the specimen in accordance with EN 12390-1, in cubic metres, rounded to four significant figures.

5.5.5 Volume obtained by using designated dimensions (cubes only)

Confirm that the cube has been made in a calibrated mould, conforming to EN 12390-1.

Check the dimensions in accordance with EN 12390-1.

Calculate the volume of the cube in cubic metres, expressed to 3 significant figures.

6 Test result

Calculate the density using the values determined for the mass of specimen and its volume, using the formula:

$$D = \frac{m}{V}$$

where:

D is the density related to the condition of the specimen and the method of determining the volume, in kilograms per cubic metre;

m is the mass of the specimen in its condition at the time of test, in kilograms;

V is the volume determined by the particular method, in cubic metres.

Report the condition of the specimen at the time of test and the method used for determining the volume of the specimen as part of the test result.

Express the result of the density determination to the nearest 10 kg/m³.

7 Test report

The report shall include:

a) identification of the test specimen;

b) location of performance of test;

c) description of the specimen (e.g. 100 mm cube, 150 mm diameter core);

d) details of specimen preparation (if any);

e) condition of specimen at time of test; (as-received, or water saturated, or oven-dried);

f) method of determination of volume; (water displacement, or measured size, or checked, designated size);

g) date of test;

h) calculated density of specimen;

i) any deviation from standard test methods;

j) a declaration by the person technically responsible for the test that it was carried out in accordance with this standard, except as noted in item i).

8 Precision

Precision data are given in Table 1. These apply to density measurements in the range 2300 kg/m^3 to 2400 kg/m^3 on cubes made from the same sample of concrete and when each test result is obtained from a single determination of the saturated density of a single cube. They indicate the variability that occurs when sampling, making and curing the cubes.

Table 1 - Precision data for measurements of the saturated density of hardened concrete

Test method	Repeatability conditions		Reproducibility conditions	
	s_r kg/m³	r kg/m³	s_R kg/m³	R kg/m³
By calculation using measured dimensions:				
100 mm cubes,	*13,9*	*39*	*20,5*	*57*
150 mm cubes.	*9,9*	*28*	*20,5*	*57*
By water displacement:				
100 mm cubes	*6,5*	*18*	*12,8*	*36*
150 mm cubes	*6,4*	*18*	*10,6*	*30*

NOTE 1 The precision data were determined as part of an experiment carried out in 1987 in which precision data were obtained for several of the tests described in BS1881. The experiment involved 16 operators. The concretes were made using an ordinary Portland cement, Thames Valley sand, and Thames Valley 10 mm and 20 mm coarse aggregates.

NOTE 2 The difference between two test results from the same sample by one operator using the same apparatus within the shortest feasible time interval will exceed the repeatability value r on average not more than once in 20 cases in the normal and correct operation of the method.

NOTE 3 Test results on the same sample obtained within the shortest feasible time interval by two operators each using their own apparatus will differ by the reproducibility value *R* on average not more than once in 20 cases in the normal and correct operation of the method.

NOTE 4 For further information on precision, and for definitions of the statistical terms used in connection with precision, see ISO 5725-1.