EUROPEAN STANDARD

NORME EUROPÉENNE

EUROPÄISCHE NORM

EN 12899-3

November 2007

ICS 93.080.30

English Version

Fixed, vertical road traffic signs - Part 3: Delineator posts and retroreflectors

Signaux fixes de signalisation routière verticale - Partie 3: Délinéateurs et rétroréflecteurs

Ortsfeste, vertikale Straßenverkehrszeichen - Teil 3: Leitpfosten und Retroreflektoren

This European Standard was approved by CEN on 4 February 2007.

CEN members are bound to comply with the CEN/CENELEC Internal Regulations which stipulate the conditions for giving this European Standard the status of a national standard without any alteration. Up-to-date lists and bibliographical references concerning such national standards may be obtained on application to the CEN Management Centre or to any CEN member.

This European Standard exists in three official versions (English, French, German). A version in any other language made by translation under the responsibility of a CEN member into its own language and notified to the CEN Management Centre has the same status as the official versions.

CEN members are the national standards bodies of Austria, Belgium, Bulgaria, Cyprus, Czech Republic, Denmark, Estonia, Finland, France, Germany, Greece, Hungary, Iceland, Ireland, Italy, Latvia, Lithuania, Luxembourg, Malta, Netherlands, Norway, Poland, Portugal, Romania, Slovakia, Slovenia, Spain, Sweden, Switzerland and United Kingdom.

EUROPEAN COMMITTEE FOR STANDARDIZATION
COMITÉ EUROPÉEN DE NORMALISATION
EUROPÄISCHES KOMITEE FÜR NORMUNG

Management Centre: rue de Stassart, 36 B-1050 Brussels

© 2007 CEN All rights of exploitation in any form and by any means reserved worldwide for CEN national Members.

Ref. No. EN 12899-3:2007: E

Contents

Page

Foreword ... 3
Introduction ... 4
1 Scope ... 5
2 Normative references ... 5
3 Terms, definitions, symbols and abbreviations ... 6
4 Dimensions and tolerances ... 7
5 Types of delineator post and retroreflector ... 7
5.1 Types of delineator post ... 7
5.2 Types of retroreflector ... 7
6 Performance requirements ... 7
6.1 General ... 7
6.2 Fixing of retroreflectors on delineator posts ... 8
6.3 Visual performance ... 8
6.4 Physical performance ... 10
7 Test methods ... 12
7.1 Test conditions ... 12
7.2 Test products ... 12
7.3 Visual performance tests ... 12
7.4 Physical performance tests ... 13
8 Marking, labelling and product information ... 15
8.1 Complete traffic delineators, delineator posts only or fixed retroreflectors only ... 15
8.2 Components ... 16
9 Evaluation of conformity ... 16
10 Dangerous substances ... 16
Annex ZA (informative) Clauses of this European Standard addressing the provisions of the EU Construction Products Directive ... 17
ZA.1 Scope and relevant characteristics ... 17
ZA.2 Procedure for attestation of conformity of delineator posts and fixed retroreflectors ... 21
ZA.3 CE marking and labelling ... 23

Foreword

This document (EN 12899-3:2007) has been prepared by Technical Committee CEN/TC 226 "Road equipment" the secretariat of which is held by AFNOR.

This European Standard shall be given the status of a national standard, either by publication of an identical text or by endorsement, at the latest by May 2008, and conflicting national standards shall be withdrawn at the latest by August 2012.

No existing European Standard is superseded.

This document has been prepared under a mandate given to CEN by the European Commission and the European Free Trade Association and supports essential requirements of EU Directives.

For relationship with EU Directives, see informative Annex ZA, which is an integral part of this document.

This European Standard consists of the following Parts under the general title:

Fixed, vertical road traffic signs —

Part 1: *Fixed signs*

Part 2: *Transilluminated traffic bollards (TTB)*

Part 3: (this part) *Delineator posts and retroreflectors*

Part 4: *Factory production control*

Part 5: *Initial type testing*

It is based on performance requirements and test methods published in CEN, CENELEC, CIE (International Commission on Illumination) and ISO documents together with standards of the CEN member organizations.

According to the CEN/CENELEC Internal Regulations, the national standards organizations of the following countries are bound to implement this European Standard: Austria, Belgium, Bulgaria, Cyprus, Czech Republic, Denmark, Estonia, Finland, France, Germany, Greece, Hungary, Iceland, Ireland, Italy, Latvia, Lithuania, Luxembourg, Malta, Netherlands, Norway, Poland, Portugal, Romania, Slovakia, Slovenia, Spain, Sweden, Switzerland and United Kingdom.

Introduction

This European Standard is designed for use by road authorities. It can also be used by private developers who wish to use signs on their own land similar to those used on public highways.

It can be used to implement type approval and certification testing.

It derives from performance requirements and test methods published in CEN, CENELEC, CIE and ISO documents together with standards of the CEN member organizations.

1 Scope

This Part 3 of EN 12899 specifies requirements for new delineator posts and for new retroreflectors as separate products or combined together to be used in traffic circulation areas.

It covers performance requirements and test methods.

Colorimetric and retroreflective properties are specified taking into account CIE recommendations.

Structural requirements include performance under static and dynamic loading.

Provision is made for safety in use, including vehicle impact.

To define durability this standard also includes performance levels to be maintained after natural weathering exposure.

No requirements are given for the use of colours, dimensions and tolerances of delineator posts and retroreflectors.

2 Normative references

The following referenced documents are indispensable for the application of this document. For dated references, only the edition cited applies. For undated references, the latest edition of the referenced document (including any amendments) applies.

EN 12767, *Passive safety of support structures for road equipment — Requirements and test methods*

EN 12899-1:2007, *Fixed, vertical road traffic signs — Part 1: Fixed signs*

EN 12899-4:2007, *Fixed, vertical road traffic signs — Part 4: Factory production control*

EN 12899-5:2007, *Fixed, vertical road traffic signs — Part 5: Initial type testing*

EN ISO 877:1996, *Plastics — Methods of exposure to direct weathering, to weathering using glass-filtered daylight, and to intensified weathering by daylight using Fresnel mirrors (ISO 877:1994)*

EN ISO 9001*, Quality management systems — Requirements (ISO 9001:2000)*

ISO 4:1997, *Information and documentation — Rules for the abbreviation of title words and titles of publications*

ISO 9227, *Corrosion tests in artificial atmospheres — Salt spray tests*

ISO/CIE 10526, *CIE standard illuminants for colorimetry*

ISO/CIE 10527, *CIE standard colorimetric observers*

CIE 15*, Colorimetry*

CIE 54.2*, Retroreflection — Definition and measurement*

3 Terms, definitions, symbols and abbreviations

For the purposes of this document, the symbols and abbreviations given in ISO 4:1997 and the following apply.

3.1
delineator post
post, placed at the edge of a carriageway, to indicate the alignment of the road and/or to warn of a hazard during daytime conditions.

NOTE The delineator post can be equipped with one or more retroreflectors

3.2
ground line
notional horizontal line on the delineator post which, when it is installed correctly, is level with the ground (see Figure 1) or with the top of the safety barrier (see Figure 2) on which it is installed

NOTE Delineator posts are normally installed in the level part of the verge so as to fulfil their function of indicating the alignment of that part of the highway on which it is safe to drive and/or to indicate the presence of a hazard.

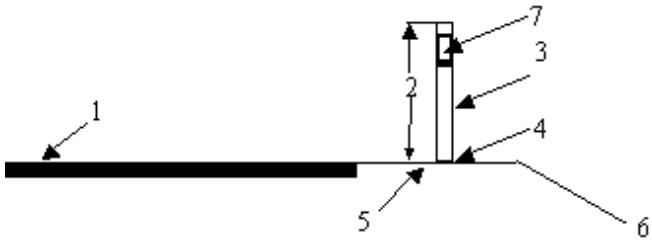

Key:

1	Carriageway	5	Verge
2	Height	6	Slope
3	Delineator post	7	Retroreflector
4	Ground line		

Figure 1 — Illustration of ground line (1)

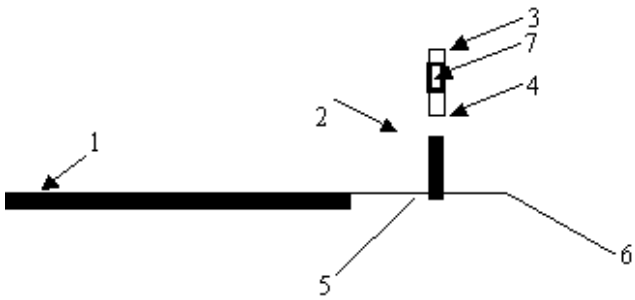

Key:

1	Carriageway	5	Verge
2	Safety barrier	6	Slope
3	Delineator post	7	Retroreflector
4	Ground line		

Figure 2 — Illustration of ground line (2)

3.3
retroreflector
device, made using any available technology, that retroreflects incident light.

NOTE Retroreflectors may be installed on delineator posts

3.4
test product
product (delineator post or retroreflector) in original size and design, or part of it prepared by the manufacturer or the supplier, to be subjected to testing in accordance with the applicable part of this standard

4 Dimensions and tolerances

Dimensions and tolerances of delineators and retroreflectors shall conform to the customer's requirements.

5 Types of delineator post and retroreflector

5.1 Types of delineator post

The classification of types of delineator post shall be:

D1 delineator posts for ground fixing which are not specifically designed to be reusable after the impact test described in 7.4.1.3;

D2 delineator posts for ground fixing which are designed to be reusable after the impact test described in 7.4.1.3 (e.g. those posts which may be dislodged, but are designed to be remounted);

D3 delineator posts for ground fixing which are designed to deflect and after the impact test as described in 7.4.1.3 return to an upright position (spring-back or flexible);

D4 delineator posts for fixing to structures (fixed), e.g. bridges, crash barriers and guard rails.

5.2 Types of retroreflector

The classification of types of retroreflector shall be:

— R1 retroreflective sheeting (material);

— R2 plastic corner cube retroreflectors;

— R3 biconvex glass retroreflectors.

6 Performance requirements

6.1 General

All parts of delineator posts of types D1, D2 and D3 shall present no sharp edges above the ground line.

If the materials are suitable for recycling this shall be indicated by the appropriate material code.

6.2 Fixing of retroreflectors on delineator posts

When fitted, retroreflectors shall be permanently fixed to delineator posts using a fixing method appropriate to the type and in accordance with the manufacturer's instructions.

6.3 Visual performance

6.3.1 Daytime chromaticity coordinates and luminance factor of delineator posts

When tested in accordance with 7.3.1, the chromaticity coordinates and luminance factor of the surfaces of delineator posts shall conform to Table 1.

Table 1 — Chromaticity coordinates and luminance factors of surface colours of delineator posts

:	1		2		3		4		Luminance factor
Colour	x	y	x	y	x	y	x	y	β
White	0,350	0,360	0,300	0,310	0,290	0,320	0,340	0,370	≥0,75
Yellow	0,522	0,477	0,470	0,440	0,427	0,483	0,465	0,534	≥0,45
Red	0,735	0,265	0,674	0,236	0,569	0,341	0,655	0,345	≥0,07
Green	0,313	0,682	0,313	0,453	0,177	0,362	0,026	0,399	≥0,10
Black	0,385	0,355	0,300	0,270	0,260	0,310	0,345	0,395	≤0,06

6.3.2 Retroreflectors

6.3.2.1 Daytime chromaticity coordinates and luminance factor

When tested in accordance with 7.3.2.1, the initial chromaticity coordinates and the luminance factors of the surfaces shall conform to EN 12899-1:2007, Table 1 or 2.

6.3.2.2 Night-time chromaticity of retroreflectors

When illuminated with CIE Standard Illuminant A and tested in accordance with 7.3.2.2, the retroreflected radiation of retroreflectors shall have initial chromaticity coordinates that lie within the regions defined in Table 2.

The nighttime chromaticity of retroreflective materials using microprismatic technology can be found in the relevant European Technical Approval (ETA).

Table 2 — Corner points of chromaticity regions for retroreflected radiation of retroreflectors

	1		2		3		4		5	
Colour	x	y	x	y	x	y	x	y	x	y
White/ uncoloured	0,390	0,410	0,440	0,440	0,500	0,440	0,500	0,390	0,420	0,370
Yellow	0,513	0,487	0,500	0,470	0,545	0,425	0,572	0,425		
Amber	0,560	0,440	0,530	0,440	0,583	0,387	0,612	0,387		
Orange	0,645	0,355	0,615	0,355	0,565	0,405	0,595	0,405		
Red	0,652	0,348	0,622	0,348	0,714	0,256	0,735	0,265		
Green	0,320	0,675	0,320	0,520	0,245	0,400	0,028	0,400		
If two of the points lie on the spectrum locus line, they shall not be connected by a straight line but shall be joined by the boundary of the spectrum locus. NOTE It is recommended that orange be not used in the same field of view as red.										

6.3.2.3 Coefficient of retroreflection R_A

All photometric tests shall be carried out in accordance with 7.3.2.3.

The minimum initial coefficient of retroreflection R_A of type R1 retroreflectors shall be classified as follows:

— R1, class RA1 as specified in EN 12899-1:2007, Table 3;

— R1, class RA2 as specified in EN 12899-1:2007, Table 4;

— R1, class 3 as specified in Table 3 of this standard multiplied by the appropriate colour factor given in Table 6.

Table 3 — Minimum initial coefficient of retroreflection R_A for type R1, class 3 retroreflectors

Entrance angle β_2 (β_1 = 0°)	Observation angle α	Coefficient of retroreflection R_A cd·lx^{-1}·m^{-2} Type 1, class 3
+5°	20'	300
+30°	2,0°	2,5

NOTE Type R1, class RA1 and class RA2 refer to retroreflective sheeting based on glass bead technology. Type R1, class 3 refers to retroreflective sheeting based on microprismatic technology.

The minimum initial coefficient of retroreflection R_A of type R2 retroreflectors shall conform to Table 4 multiplied by the appropriate colour factor given in Table 6.

Table 4 — Minimum initial coefficient of retroreflection R_A for type R2 retroreflectors

Entrance angle β_2 (β_1 = 0°)	Observation angle α	Coefficient of retroreflection R_A cd·lx^{-1}·m^{-2}	Coefficient of retroreflection R_A cd·lx^{-1}·m^{-2}
		class 1	class 2
+5°	20'	200	400
+30°	2,0°	0,8	2,5

The minimum initial coefficient of retroreflection R_A of type R3 retroreflectors shall conform to Table 5 multiplied by the appropriate colour factor given in Table 6.

Table 5 — Minimum initial coefficient of retroreflection R_A for type R3 retroreflectors

Entrance angle β_2 (β_1 = 0°)	**Observation angle** α	**Coefficient of retroreflection** R_A cd·lx^{-1}·m^{-2}
+5°	20'	120
+30°	2,0°	2,0

Table 6 — Colour factors for retroreflectors

Colour	**Colour factor of retroreflectors**
White	1,0
Yellow	0,6
Amber	0,5
Orange	0,3
Red	0,2
Green	0,2

6.4 Physical performance

6.4.1 Delineator posts

6.4.1.1 Static requirement (wind loading)

When tested in accordance with 7.4.1.1, delineator posts of types D1, D2 and D3 shall not be damaged or show a permanent deflection not exceeding 5 % of the height above the ground line. The temporary deflection shall not exceed the values shown in Table 7.

Table 7 — Static load – maximum temporary deflection

Classes	Maximum temporary deflection of delineator post height above ground line
WL 0	No performance determined
WL 1	15 %
WL 2	5 %

6.4.1.2 Dynamic impact resistance (material requirement)

When tested in accordance with 7.4.1.2, delineator posts of types D1 and D2 shall remain intact and type D3 shall return to the vertical. No delineator post shall be damaged or splintered into pieces.

There shall be no permanent deflection greater than 5 % of the height above the ground line. Measurement of permanent deflection shall be carried out 24 h after the material test.

6.4.1.3 Dynamic impact resistance (functional requirement)

When tested in accordance with 7.4.1.3, delineator posts of type D1 need not remain reusable, delineator posts of type D2 shall remain reusable and delineator posts of type D3 shall remain reusable and return to the vertical after the test procedure. There shall be no permanent deflection of types D2 or D3 greater than 5 % of the height above the ground line. Measurement of permanent deflection shall be carried out 24 h after the functional test.

6.4.1.4 Dynamic impact resistance (crash requirement)

Delineator posts of the types D1, D2 and D3 with a mass of more than 6 kg shall be tested in accordance with 7.4.1.4.

6.4.1.5 Corrosion resistance

If delineator posts use metal parts, which are coated with plastics, they shall be subjected to a neutral salt spray test in accordance with 7.4.1.5. After the test, the samples shall show no evidence of corrosion such as rust stains or blistering of the coating, or any other change in appearance compared with an untreated sample.

This test is not applicable for hot dipped galvanised parts. Hot dipped parts shall be galvanised in accordance with ISO 1461.

6.4.1.6 Natural weathering

After exposure in accordance with 7.4.1.6, daytime visibility and impact resistance shall be tested.

Daytime visibility shall conform to the requirements of Table 1. After the impact resistance test in accordance with 7.4.1.2, delineator posts shall not break or splinter into pieces.

6.4.2 Retroreflectors

6.4.2.1 Dynamic impact resistance

When tested in accordance with 7.4.2.2 using one of the drop heights specified in Table 8, retroreflectors shall show no cracking or delamination outside a circle of 12 mm radius with the point of impact as centre.

Table 8 — Drop height DH in dynamic impact test for retroreflectors

Class	Drop height of steel ball (mm)
DH 0	No performance determined
DH 1	200
DH 2	400

6.4.2.2 Corrosion resistance

Tests shall be carried out only on metallized retroreflectors. After exposure in accordance with 7.4.2.3, the mean coefficient of retroreflection shall be not less than 80 % of the values required in 6.3.2.3 as appropriate.

6.4.2.3 Water resistance

After exposure in accordance with 7.4.2.4, the retroreflectors shall show no water or water vapour intake on the optical parts. Water or water vapour penetration into the edges of R1 retroreflectors shall not be deemed to indicate failure.

6.4.2.4 Durability

Type R1, class RA1 and class RA2 retroreflectors shall be exposed for 3 years in accordance with EN ISO 877:1996, Method A and then be tested in accordance with EN 12899-1:2007, 4.1.1.5.

Type R1, class 3, type R2 and type R3 retroreflectors shall be exposed for 2 years in accordance with EN ISO 877:1996, Method A. Chromaticity coordinates of the retroreflected radiation shall be within the regions defined in Table 2 of this standard. The coefficient of retroreflection shall be not less than 80 % of the values required in 6.3.2.3. After subjecting to the impact resistance test in accordance with 7.4.2.2, there shall be no cracking or delamination outside a circle of 12 mm radius with the point of impact as centre.

7 Test methods

7.1 Test conditions

If not specified, tests shall be carried out at a temperature of (23 ± 2) °C and a relative humidity of (50 ± 5) %.

Tests shall be carried out separately on delineator posts and on retroreflectors.

7.2 Test products

All test products shall be representative of normal production. For testing, retroreflectors of type R1 shall be bonded on to aluminium plates with a minimum thickness of 2 mm.

7.3 Visual performance tests

7.3.1 Daytime visibility of delineator posts

Measurements shall be made on three delineator posts, in accordance with the procedures specified in CIE 15 using Standard Illuminant D65 and CIE 45/0 geometry.

7.3.2 Retroreflectors

7.3.2.1 Daytime visibility

Measurements shall be made on three type R1, class RA1 and class RA2 retroreflector test products in accordance with the procedures specified in CIE 15 using Standard Illuminant D65 and CIE 45/0 geometry.

7.3.2.2 Night-time chromaticity of retroreflectors

Measurements shall be made on five retroreflectors, in accordance with the procedure specified in CIE 54.2 using CIE Standard Illuminant A. Colour functions and calculation methods shall be in accordance with ISO/CIE 10526 and ISO/CIE 10527 (2° visual field).

Measuring geometry: observation angle α = 20’, entrance angle β_2 = +5°, β_1 = 0°.

7.3.2.3 Coefficient of retroreflection R_A

Measurements shall be made on five retroreflector samples, in accordance with the procedures specified in CIE 54.2, using CIE Standard Illuminant A and using a photometer head adapted to the relative spectral response of the CIE Standard Photometric Observer.

7.4 Physical performance tests

7.4.1 Delineator posts

7.4.1.1 Static test (deflection under wind loading)

Static tests shall be carried out as follows.

Precondition three new delineator posts for at least 4 h at a temperature of (23 ± 2) °C. They shall be fixed horizontally in a base clamp so that the ground line is level with the top of the clamp. Apply a test load in the traffic direction corresponding to 0,42 kN/m^2 in the middle of the delineator post. After 120 s measure the temporary deflection at the top of the delineator post with the test load still applied.

Remove the test load and after 120 s measure the permanent deflection at the top of the delineator post.

Report the measured values of the temporary and permanent deflection as a percentage of the total height of delineator above the ground line.

7.4.1.2 Dynamic impact resistance test (material test)

Dynamic impact resistance tests (material) shall be carried out as follows:

Precondition three new delineator posts for at least 4 h at a temperature of (-20 ± 2) °C. An appropriate pendulum impact machine shall be used and test delineator posts shall be fixed in a base clamp so that the ground line is level with the top of the clamp. The pendulum bumper shall be flat and 250 mm x 500 mm in size and shall strike the delineator with its upper edge 150 mm below the top. The length of the pendulum to the centre of the bumper shall be (1 000 ± 20) mm. The impact energy striking the delineator shall be in a direction parallel to the road and shall be 150 Nm (see Figure 3).

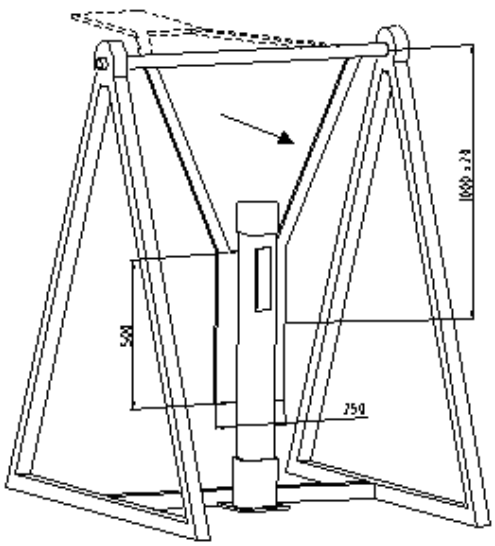

Figure 3 — Dynamic impact test equipment

7.4.1.3 Dynamic impact resistance test (functional test)

Dynamic impact resistance tests (functional tests) shall be carried out as follows.

Precondition three new delineator posts for at least 4 h at a temperature of (23 ± 2) °C. Delineator posts which are driven directly into the soil shall be fixed for the test in a base clamp so that their ground line is level with the top of the clamp. Other delineator posts shall be installed in accordance with the manufacturer's instructions so as not to interfere with their intended function. The same pendulum device as described in 7.4.1.2 shall be used and shall strike the delineator post with the lower edge of its bumper 250 mm above the ground line. Impact energy shall strike the delineator simulating an impact in the direction of travel and shall be 300 Nm.

7.4.1.4 Dynamic impact resistance test (crash test)

Dynamic impact resistance tests (crash tests) shall be carried out as follows.

The test shall be carried out only on delineator posts with a mass of more than 6 kg. Three delineator posts shall be tested and the results expressed in accordance with EN 12767 for unharmful support structures with a speed of 70 km/h. Test delineator posts shall be installed in accordance with the manufacturer's instructions.

7.4.1.5 Corrosion resistance test

The metal parts of three delineator posts, which are coated with plastics shall be subjected to the neutral salt spray test in accordance with ISO 9227 at (35 ± 2) °C for a duration of 240 h.

For hot dipped galvanised metal parts the thickness of galvanisation shall be tested in accordance with ISO 1461. For all other metal parts, whether coated or not, they shall be subject to the salt spray test in accordance with EN ISO 9227 at (35 ± 2) °C for a duration of 240 h.

7.4.1.6 Natural weathering test

Three delineator posts shall be tested for a continuous period of 2 years in accordance with EN ISO 877:1996, Method A, inclined at an angle of 45° to the horizontal and facing the equator. They shall be fixed in an appropriate test rack by means of a base clamp so that the ground line will be level with the clamp. Before testing daytime visibility in accordance with 6.3.1 and impact resistance in accordance with 6.4.1.2, test products shall be cleaned and conditioned in accordance with the provisions in 7.1.

7.4.2 Retroreflectors

7.4.2.1 General

For these tests, type R1 retroreflectors shall be prepared as described in 7.2.

7.4.2.2 Dynamic impact resistance test

Dynamic impact resistance tests shall be carried out as follows.

Three retroreflectors shall be preconditioned for at least 4 h at a temperature of (-20 ± 2) °C and (23 ± 2) °C. Position them on a 15 mm thick steel plate. Impact the faces of the retroreflectors in the centre of the retroreflective area (excluding holes and joints) allowing a steel ball with a diameter of 20 mm to fall from a height as specified in Table 8.

7.4.2.3 Corrosion resistance test

Three retroreflectors shall be subjected to the neutral salt spray test in accordance with ISO 9227 at (35 ± 2) °C for a duration of 96 h. They shall be cleaned carefully before measurement.

The measurement geometry shall be:

— for type R1, class RA1 and RA2 retroreflectors: observation angle 20', entrance angle β_1 = +5° and β_2 = 0°;

— for type R1, class 3, type R2 and type R3 retroreflectors: observation angle 20', entrance angle β_1 = 0° and β_2 = +5°.

7.4.2.4 Water resistance test

Water resistance tests shall be carried out as follows.

Precondition three retroreflectors by keeping them at a temperature of (23 ± 2) °C and (70 ± 5) % relative humidity for at least 4 h before testing. Fill two beakers with distilled water to a level such that the three retroreflectors will be totally immersed. Heat the water in the first beaker to a constant temperature of (60 ± 2) °C. Cool the water in the second beaker to a constant temperature of (5 ± 2) °C. Subject the retroreflectors to 1 h total immersion in the heated water then transfer them to the cooled water. Repeat this cycle five times. After termination of the test cycles, remove the retroreflectors from the water and dry them with a towel. Put the test products on a heated plate with a temperature between 30 °C and 40 °C and examine for 15 min for any visible signs of water ingress without taking the edges of type R1 retroreflectors into consideration.

7.4.2.5 Natural weathering test

Three retroreflectors shall be tested in accordance with EN ISO 877:1996, Method A, inclined at an angle of 45° to the horizontal and facing the equator.

Type R1, class RA1 and class RA2 retroreflectors shall be exposed for 3 years. Tests shall be made on the carefully cleaned test products. All other retroreflectors shall be exposed for 2 years. The following tests shall then be made.

— Measurement of chromaticity coordinates of retroreflected radiation in accordance with 7.3.2.2.

— Measurement of the coefficient of retroreflection in accordance with 7.3.2.3. Measurement geometry shall be: observation angle = 20', entrance angle β_2 = +5° and β_1 = 0°.

— Dynamic impact resistance test in accordance with 7.4.2.2.

8 Marking, labelling and product information

8.1 Complete traffic delineators, delineator posts only or fixed retroreflectors only

8.1.1 Marking and labelling

Voluntary marking shall be affixed in such a way as to avoid obscuring or causing confusion with regulatory marking.

NOTE Regulatory marking requirements are given in ZA.3.

8.1.2 Product information

The manufacturer or supplier shall make available the following information:

a) instructions for assembly, mounting and fixing;

b) details of any limitations on location or use;

c) instructions for the operation, maintenance and cleaning.

8.2 Components

The manufacturer shall make available a complete specification of the component.

9 Evaluation of conformity

9.1 The conformity of a delineator post and/or a retroreflector with the requirements of this standard and with the stated values (including classes) shall be demonstrated by:

— initial type testing in accordance with EN 12899-5:2007;

— factory production control by the manufacturer in accordance with EN 12899-4:2007.

9.2 For the purposes of testing, the delineators or retroreflectors may be grouped into families, where it is considered that the selected characteristics are common to all the delineators or retroreflectors within that family.

9.3 A FPC system conforming to the requirements of EN ISO 9001, and made product specific to the requirements of this standard, shall be considered to satisfy the FPC requirements.

10 Dangerous substances

Materials used in products shall not release any dangerous substances in excess of the maximum permitted levels specified in a relevant European Standard for the material or permitted in the national regulations of the Member State of destination.

Annex ZA
(informative)
Clauses of this European Standard addressing the provisions of the EU Construction Products Directive

ZA.1 Scope and relevant characteristics

This European Standard has been prepared under Mandate M/111 Circulation fixtures given to CEN by the European Commission and the European Free Trade Association.

The clauses of this European Standard shown in this annex meet the requirements of the mandate given under the EU Construction Products Directive (89/106/EEC).

Compliance with these clauses confers a presumption of fitness of the delineator posts and fixed retroreflectors covered by this annex for the intended uses indicated herein; reference shall be made to the information accompanying the CE marking.

> **WARNING:** Other requirements and other EU Directives, not affecting the fitness for intended uses, can be applicable to the delineator posts and fixed retroreflectors falling within the scope of this European Standard.

NOTE 1 In addition to any specific clauses relating to dangerous substances contained in this standard, there may be other requirements applicable to the products falling within its scope (e.g. transposed European legislation and national laws, regulations and administrative provisions). In order to meet the provisions of the EU Construction Products Directive, these requirements need also to be complied with, when and where they apply.

NOTE 2 An informative database of European and national provisions on dangerous substances is available at the Construction web site on EUROPA (accessed through http://europa.eu.int/comm/enterprise/construction/internal/dangsub/dangmain.htm).

This annex establishes the conditions for the CE marking of the delineator posts and fixed retroreflectors intended for the uses indicated in Tables ZA.1 to ZA.2 and shows the relevant clauses applicable.

This annex has the same scope as Clause 1 of this standard and is defined by Tables ZA.1 to ZA.3.

Table ZA.1 – Relevant clauses for delineator posts and intended for the information, guidance, warning and direction of road users

Product: Delineator posts **Intended use:** for the information, guidance, warning and direction of road users			
Essential Characteristics	**Requirement clauses in this and other European Standards**	**Mandated levels and/or classes**	**Notes**
Resistance to horizontal loads Static requirement (wind loading)	6.4.1.1	None	pass/fail selected class 3 classes WL0, WL1 and WL2
Performance under vehicle impact (passive safety) (Dynamic impact resistance (material requirement)), (Dynamic impact resistance (functional requirement)) (Dynamic impact resistance (passive safety))	6.4.1.2 6.4.1.3 6.4.1.4	None	pass/fail. pass/fail pass/fail
Visibility characteristics			
Chromaticity coordinates	6.3.1	None	pass/fail
Luminance factor	6.3.1	None	pass/fail
Durability			
Resistance to corrosion	6.4.1.5	None	Declared class
Resistance to UV radiation (accelerated natural weathering test)	6.4.1.6	None	pass/fail
Dangerous substances	10	None	ppm or NPD

Table ZA.2 – Relevant clauses for fixed retroreflectors and intended for the information, guidance, warning and direction of road users

Product: **Fixed retroreflectors** **Intended use:** **for the information, guidance, warning and direction of road users**			
Essential Characteristics	**Requirement clauses in this and other European Standards**	**Mandated levels and/or classes**	**Notes**
Performance under vehicle impact (passive safety)	6.4.2.1	None	pass/fail selected class 3 classes DH0, DH1 and DH2
Visibility characteristics			
Chromaticity coordinates (Daytime visibility)	6.3.2.1	None	pass/fail Only for type R1 classes RA1 and RA2 retroreflectors
Chromaticity coordinates (Night-time chromaticity)	6.3.2.2	None	pass/fail
Luminance factor (Daytime visibility)	6.3.2.1	None	pass/fail Only for type R1 classes RA1 and RA2 retroreflectors
Coefficient of retroreflection R_A	6.3.2.3 coefficient of retroreflection R_A	None	pass/fail $cd.lx^{-1}.m^{-2}$ R_A values for 3 types of retroreflectors
Durability			
Resistance to corrosion	6.4.2.2	None	Declared class
Water resistance	6.4.2.3	None	pass/fail.
Resistance to UV radiation (natural weathering test)	6.4.2.4	None	pass/fail.
Dangerous substances	10	None	ppm or NPD

Table ZA.3 – Relevant clauses for delineator posts complete with fixed retroreflectors and intended for the information, guidance, warning and direction of road users

Product: Delineator posts complete with fixed retroreflectors **Intended use:** for the information, guidance, warning and direction of road users			
Essential Characteristics	**Requirement clauses in this and other European Standards**	**Mandated levels and/or classes**	**Notes**
Resistance to horizontal loads Static requirement (wind loading)	6.4.1.1	None	pass/fail selected class 3 classes WL0, WL1 and WL2
Performance under vehicle impact (passive safety) (Dynamic impact resistance (material requirement)), (Dynamic impact resistance (functional requirement)) (Dynamic impact resistance (passive safety)	 6.4.1.2 6.4.1.3 6.4.1.4	None	 pass/fail. pass/fail pass/fail
Impact resistance (reflectors) (Dynamic impact resistance)	6.4.2.1	None	pass/fail selected class 3 classes DH0, DH1 and DH2
Visual performance (posts)			
Daytime chromaticity coordinates and luminance factor	6.3.1	None	pass/fail
Visual performance (reflectors)			
Daytime chromaticity coordinates and luminance factor	6.3.2.1	None	pass/fail Only for type R1 classes RA1 and RA2 retroreflectors
Night-time chromaticity coordinates and luminance factor	6.3.2.2	None	pass/fail
Coefficient of retroreflection R_A	6.3.2.3	None	pass/fail R_A values for 3 types of retroreflectors $cd.lx^{-1}.m^{-2}$
Durability			
Resistance to corrosion	6.4.2.2	None	Declared class
Water resistance	6.4.2.3	None	pass/fail
Resistance to UV radiation (natural weathering test)	6.4.2.4	None	pass/fail
Dangerous substances	10	None	ppm or NPD

The requirement for a certain characteristic is not applicable in those Member States (MSs) where there are no regulatory requirements for that characteristic for the intended use of the product. In this case, manufacturers placing their products on the markets of these MSs are not obliged to determine or declare the performance of their products with regard to this characteristic and the option “No performance determined” (NPD) in the information accompanying the CE marking (see ZA.3) may be used.

ZA.2 Procedure for attestation of conformity of delineator posts and fixed retroreflectors

ZA.2.1 System of attestation of conformity

The system of attestation of conformity of delineator posts and fixed retroreflectors indicated in Table(s) ZA.1 to ZA.3, in accordance with the Decision of the Commission (96/579/EC) of (1996-06-24) as given in Annex III of the mandate for Mandate M/111 Circulation fixtures is shown in Table ZA.4 for the indicated intended use(s)

Table ZA.4 – System of attestation of conformity

Product(s)	Intended use(s)	Mandated levels or classes	Attestation of conformity system
Delineator posts	information, guidance, warning and direction of road users		1
Fixed retroreflectors	information, guidance, warning and direction of road users		1
System 1: without audit testing of samples.			

The attestation of conformity of the delineator posts and fixed retroreflectors in Tables ZA.1 to ZA.3 shall be based on the evaluation of conformity procedures indicated in Table ZA.5 resulting from application of the clauses of this or other European Standards indicated therein.

Table ZA.5 – Assignment of evaluation of conformity tasks for (products) under system 1

Tasks		Content of the task	Evaluation of conformity clauses to apply
Responsibility of the manufacturer	Factory production control (FPC)	Parameters related to all relevant characteristics of Table ZA.1	EN 12899-4:2007
	Further testing of samples taken at factory	All relevant characteristics of Table ZA.1	EN 12899-4:2007
Responsibility of the product certification body	Initial type testing	All characteristics of Table ZA.1	EN 12899-5:2007
	Initial inspection of factory and of FPC	All relevant characteristics of Table ZA.1	EN 12899-4:2007
	Continuous surveillance, assessment and approval of FPC	Parameters related to all relevant characteristics of Table ZA.1	EN 12899-4:2007

ZA.2.2 EC Certificate and Declaration of conformity

When compliance with the conditions of this annex is achieved, the certification body shall draw up a certificate of conformity (EC Certificate of conformity), which entitles the manufacturer to affix the CE marking. The certificate shall include:

- name, address and identification number of the certification body;
- name and address of the manufacturer, or his authorised representative established in the EEA, and place of production;
- description of the product (type, identification, use);
- provisions to which the product conforms (i.e. Annex ZA of this standard);
- particular conditions applicable to the use of the product (e.g. provisions for use under certain conditions);
- number of the certificate;
- conditions and period of validity of the certificate, where applicable;
- name of, and position held by, the person empowered to sign the certificate.

In addition, the manufacturer shall draw up a declaration of conformity (EC Declaration of conformity) including the following:

- name and address of the manufacturer, or his authorised representative established in the EEA;
- name and address of the certification body;
- description of the product (type, identification, use), and a copy of the information accompanying the CE marking;

- provisions to which the product conforms (i.e. Annex ZA of this EN);

- particular conditions applicable to the use of the product (e.g. provisions for use under certain conditions);

- number of the accompanying EC Certificate of conformity;

- name of, and position held by, the person empowered to sign the declaration on behalf of the manufacturer or of his authorised representative.

The above mentioned declaration and certificate shall be presented in the official language or languages accepted by the Member State in which the product is to be used.

ZA.3 CE marking and labelling

The manufacturer or his authorised representative established within the EEA is responsible for the affixing of the CE marking. The CE marking symbol to affix shall be in accordance with Directive 93/68/EC and shall be shown on the delineator posts and/or fixed retroreflectors (or, when this is not possible, on the accompanying commercial documents). The following information shall accompany the CE marking symbol:

- identification number of the certification body

- name or identifying mark and registered address of the producer;

- last two digits of the year in which the marking is affixed;

- number of the EC Certificate of conformity;

- reference to this European Standard (EN 12899-3);

- description of the product: generic name, material, dimensions and intended use;

- information on those relevant essential characteristics listed in Table ZA.1 to ZA.3 which are to be declared:
    - declared values and, where relevant, level or class (including “pass” for pass/fail requirements, where necessary) to declare for each essential characteristic as indicated in "Notes" in Tables ZA.1, ZA.2 and ZA.3;

    - “No performance determined” for characteristics where this is relevant.

The NPD option may be used when and where the characteristic, for a given intended use, is not subject to regulatory requirements in the Member State of destination.

The information to be supplied and its location shall be:

On the product

1. "CE" symbol,

2. name or identifying mark of the manufacturer,

3. number and year of this European Standard (i.e. EN 12899-3:2007),

In the accompanying commercial documents

1. all information on the product,

2. identification of the type of product in accordance with EN 12899-3,
3. registered address of the producer,
4. last two digits of the year in which the product was manufactured,
5. reference of the notified body and the number of EC certificate of conformity,
6. identifications of the characteristics of the product.

Figures ZA.1 to ZA.3 give examples of the information to be given on the product, label, packaging and/or commercial documents.

CE 07 01234	*CE conformity marking, consisting of the "CE"-symbol given in Directive 93/68/EEC.* *Last two digits of the year in which the marking was affixed* *Identification number of the certification body*
Any Co Ltd, PO Box 21, B-1050 01234-CPD-00234	*Name or identifying mark and registered address of the producer* *Certificate number*
EN 12899-3:2007 Delineator posts for the information, guidance, warning and direction of road users Type **D1**	*No. of European Standard* *Description of product and information on regulated characteristics*
Resistance to horizontal loads - WL1 - pass	
Performance under vehicle impact (passive safety) - pass	
Visual performance	
Chromaticity coordinates - pass	
Durability	
Corrosion resistance - SP1 - pass	
Resistance to UV (Accelerated natural weathering) - pass	
Dangerous substances - NPD (or "Substance X - less than n ppm")	

Figure ZA.1 - Identification of the performance characteristics of delineator posts

CE 07 01234	*CE conformity marking, consisting of the "CE"-symbol given in Directive 93/68/EEC.* *Last two digits of the year in which the marking was affixed* *Identification number of the certification body*
Any Co Ltd, PO Box 21, B-1050 01234-CPD-00234	*Name or identifying mark and registered address of the producer* *Certificate number (where relevant) (17)*
EN 12899-3:2007 Fixed retroreflectors for the information, guidance, warning and direction of road users	*No. of European Standard* *Description of product* *and* *information on regulated characteristics*
Impact resistance - Class DH1 Table 8	
Visual performance	
Chromaticity coordinates – Table 2 - pass	
Coefficient of retroreflection - Table 5 - pass	
Durability:	
Resistance to corrosion - SP1 Resistance to water penetration - pass Resistance to UV (accelerated natural weathering) - pass	
Dangerous substances - NPD (or "Substance X - less than n ppm")	

Figure ZA.2 - Identification of the performance characteristics of fixed retroreflectors

CE 07 01234	*CE conformity marking, consisting of the "CE"-symbol given in Directive 93/68/EEC.* *Last two digits of the year in which the marking was affixed* *Identification number of the certification body*
Any Co Ltd, PO Box 21, B-1050 01234-CPD-00234	*Name or identifying mark and registered address of the producer* *Certificate number (where relevant) (17)*
EN 12899-3:2007 Delineator posts fitted with fixed retroreflectors for the information, guidance, warning and direction of road users	*No. of European Standard* *Description of product* *and* *information on regulated characteristics*
Resistance to horizontal loads - WL1 – pass **Performance under vehicle impact** (passive safety) – pass (Dynamic impact resistance (material requirement)), – pass (Dynamic impact resistance (functional requirement)) – pass (Dynamic impact resistance (crash requirement)) – pass **Impact resistance (reflectors)** (Dynamic impact resistance) – pass **Visual performance (posts)** Daytime chromaticity coordinates and luminance factor Table 1 - pass **Visual performance (reflectors)**	

Daytime chromaticity coordinates and luminance factor – pass Night-time Chromaticity coordinates – pass Coefficient of retroreflection – Table 5 – pass **Durability** Corrosion resistance (posts) - SP1 - pass Resistance to UV (posts) (accelerated natural weathering) – pass Impact resistance (posts) – DH1 - pass **Durability** Resistance to corrosion (retroreflectors) - SP1 – pass Resistance to water penetration (retroreflectors) – pass Resistance to UV (retroreflectors) (accelerated natural weathering) - pass **Dangerous substances** - NPD (or "Substance X - less than n ppm")	

Figure ZA.3 - Identification of the performance characteristics of Delineator posts fitted with fixed retroreflectors

In addition to any specific information relating to dangerous substances shown above, the product should also be accompanied, when and where required and in the appropriate form, by documentation listing any other legislation on dangerous substances for which compliance is claimed, together with any information required by that legislation.

NOTE European legislation without national derogations need not be mentioned.