ICS: 25.160.10

Geregistreerde Belgische norm

NBN EN ISO 18594

1e uitg., augustus 2007

Normklasse: F 01

Weerstandspuntlassen, projectielassen en rolnaadlassen - Methode voor de bepaling van de overbruggingsweerstand op aluminium en staal (ISO 18594:2007)

Soudage par résistance par points, par bossage et à la molette - Méthode pour la détermination de la résistance de transition sur l'aluminium et sur l'acier (ISO 18594:2007)

Resistance spot-, projection- and seam-welding - Method for determining the transition resistance on aluminium and steel material (ISO 18594:2007)

Toelating tot publicatie: 19 juni 2007

Deze Europese norm EN ISO 18594:2007 heeft de status van een Belgische norm.

Deze Europese norm bestaat in drie officiële versies (Duits, Engels, Frans).

standards for .be

Bureau voor Normalisatie Brabançonnelaan 29 B-1000 Brussel België
Tel: +32 2 738 01 12 - Fax: +32 2 733 42 64 - E-mail: info@nbn.be - NBN Online: www.nbn.be
Bank 000-3255621-10 IBAN BE41 0003 2556 2110 BIC BPOT BEB1 BTW: BE 0880.857.592

© NBN 2007

Prijsgroep: 15

ICS: 25.160.10

norme belge enregistrée

NBN EN ISO 18594

1e éd., août 2007

Indice de classement: F 01

Soudage par résistance par points, par bossage et à la molette - Méthode pour la détermination de la résistance de transition sur l'aluminium et sur l'acier (ISO 18594:2007)

Weerstandspuntlassen, projectielassen en rolnaadlassen - Methode voor de bepaling van de overbruggingsweerstand op aluminium en staal (ISO 18594:2007)

Resistance spot-, projection- and seam-welding - Method for determining the transition resistance on aluminium and steel material (ISO 18594:2007)

Autorisation de publication: 19 juin 2007

La présente norme européenne EN ISO 18594:2007 a le statut d'une norme belge.

La présente norme européenne existe en trois versions officielles (allemand, anglais, français).

standards for .be

Bureau de Normalisation - Avenue de la Brabançonne 29 - 1000 Bruxelles - Belgique
Tél: +32 2 738 01 12 - Fax: +32 2 733 42 64 - E-mail: info@nbn.be - NBN Online: www.nbn.be
Banque 000-3255621-10 IBAN BE41 0003 2556 2110 BIC BPOT BEB1 TVA: BE 0880.857.592

© NBN 2007

Prix: groupe 15

EUROPEAN STANDARD

NORME EUROPÉENNE

EUROPÄISCHE NORM

EN ISO 18594

March 2007

ICS 25.160.10

English Version

Resistance spot-, projection- and seam-welding - Method for determining the transition resistance on aluminium and steel material (ISO 18594:2007)

Soudage par résistance par points, par bossage et à la molette - Méthode pour la détermination de la résistance de transition sur l'aluminium et sur l'acier (ISO 18594:2007)

Widerstandspunkt-, Buckel- und Rollennahtschweißen - Verfahren für das Bestimmen des Übergangswiderstands von Aluminium- und Stahlwerkstoffen (ISO 18594:2007)

This European Standard was approved by CEN on 17 February 2007.

CEN members are bound to comply with the CEN/CENELEC Internal Regulations which stipulate the conditions for giving this European Standard the status of a national standard without any alteration. Up-to-date lists and bibliographical references concerning such national standards may be obtained on application to the CEN Management Centre or to any CEN member.

This European Standard exists in three official versions (English, French, German). A version in any other language made by translation under the responsibility of a CEN member into its own language and notified to the CEN Management Centre has the same status as the official versions.

CEN members are the national standards bodies of Austria, Belgium, Bulgaria, Cyprus, Czech Republic, Denmark, Estonia, Finland, France, Germany, Greece, Hungary, Iceland, Ireland, Italy, Latvia, Lithuania, Luxembourg, Malta, Netherlands, Norway, Poland, Portugal, Romania, Slovakia, Slovenia, Spain, Sweden, Switzerland and United Kingdom.

EUROPEAN COMMITTEE FOR STANDARDIZATION
COMITÉ EUROPÉEN DE NORMALISATION
EUROPÄISCHES KOMITEE FÜR NORMUNG

Management Centre: rue de Stassart, 36 B-1050 Brussels

© 2007 CEN All rights of exploitation in any form and by any means reserved worldwide for CEN national Members.

Ref. No. EN ISO 18594:2007: E

Foreword

This document (EN ISO 18594:2007) has been prepared by Technical Committee ISO/TC 44 "Welding and allied processes" in collaboration with Technical Committee CEN/TC 121 "Welding", the secretariat of which is held by DIN.

This European Standard shall be given the status of a national standard, either by publication of an identical text or by endorsement, at the latest by September 2007, and conflicting national standards shall be withdrawn at the latest by September 2007.

According to the CEN/CENELEC Internal Regulations, the national standards organizations of the following countries are bound to implement this European Standard: Austria, Belgium, Bulgaria, Cyprus, Czech Republic, Denmark, Estonia, Finland, France, Germany, Greece, Hungary, Iceland, Ireland, Italy, Latvia, Lithuania, Luxembourg, Malta, Netherlands, Norway, Poland, Portugal, Romania, Slovakia, Slovenia, Spain, Sweden, Switzerland and United Kingdom.

Endorsement notice

The text of ISO 18594:2007 has been approved by CEN as EN ISO 18594:2007 without any modifications.

INTERNATIONAL STANDARD

ISO 18594

First edition
2007-03-01

Resistance spot-, projection- and seam-welding — Method for determining the transition resistance on aluminium and steel material

Soudage par résistance par points, par bossages et à la molette — Méthode pour la détermination de la résistance de transition sur l'aluminium et sur l'acier

Reference number
ISO 18594:2007(E)

© ISO 2007

PDF disclaimer

This PDF file may contain embedded typefaces. In accordance with Adobe's licensing policy, this file may be printed or viewed but shall not be edited unless the typefaces which are embedded are licensed to and installed on the computer performing the editing. In downloading this file, parties accept therein the responsibility of not infringing Adobe's licensing policy. The ISO Central Secretariat accepts no liability in this area.

Adobe is a trademark of Adobe Systems Incorporated.

Details of the software products used to create this PDF file can be found in the General Info relative to the file; the PDF-creation parameters were optimized for printing. Every care has been taken to ensure that the file is suitable for use by ISO member bodies. In the unlikely event that a problem relating to it is found, please inform the Central Secretariat at the address given below.

© ISO 2007

All rights reserved. Unless otherwise specified, no part of this publication may be reproduced or utilized in any form or by any means, electronic or mechanical, including photocopying and microfilm, without permission in writing from either ISO at the address below or ISO's member body in the country of the requester.

ISO copyright office
Case postale 56 • CH-1211 Geneva 20
Tel. + 41 22 749 01 11
Fax + 41 22 749 09 47
E-mail copyright@iso.org
Web www.iso.org

Published in Switzerland

Contents

Page

Foreword ... iv
1 Scope ... 1
2 Terms and definitions ... 1
3 Basic principles ... 2
4 Measurement ... 2
4.1 Measuring set-up ... 2
4.2 Measurement procedure ... 5
5 Test equipment ... 6
6 Formulae and abbreviations for calculating the transition resistance ... 7
7 Test report ... 8
Annex A (informative) **Test report** ... 9
Bibliography ... 11

© ISO 2007 – All rights reserved

Foreword

ISO (the International Organization for Standardization) is a worldwide federation of national standards bodies (ISO member bodies). The work of preparing International Standards is normally carried out through ISO technical committees. Each member body interested in a subject for which a technical committee has been established has the right to be represented on that committee. International organizations, governmental and non-governmental, in liaison with ISO, also take part in the work. ISO collaborates closely with the International Electrotechnical Commission (IEC) on all matters of electrotechnical standardization.

International Standards are drafted in accordance with the rules given in the ISO/IEC Directives, Part 2.

The main task of technical committees is to prepare International Standards. Draft International Standards adopted by the technical committees are circulated to the member bodies for voting. Publication as an International Standard requires approval by at least 75 % of the member bodies casting a vote.

Attention is drawn to the possibility that some of the elements of this document may be the subject of patent rights. ISO shall not be held responsible for identifying any or all such patent rights.

ISO 18594 was prepared by Technical Committee ISO/TC 44, *Welding and allied processes*, Subcommittee SC 6, *Resistance welding*.

Requests for official interpretations of any aspect of this International Standard should be directed to the Secretariat of ISO/TC 44/SC 6 via your national standards body. A complete listing of these bodies can be found at www.iso.org.

© ISO 2007 – All rights reserved

Resistance spot-, projection- and seam-welding — Method for determining the transition resistance on aluminium and steel material

1 Scope

This International Standard specifies the procedure and the experimental set-up for determining the transition resistance of a single sheet or two overlapping sheets of aluminium or steel, with or without surface treatment, and with or without surface coating.

2 Terms and definitions

For the purposes of this document, the following terms and definitions apply.

2.1
contact resistance
electric property of a contact area between two bodies which opposes and limits the passage through it of a steady current

EXAMPLE The contacts between electrode/electrode, electrode/sheet and sheet/sheet.

2.2
bulk resistance
ohmic resistance of an electrical conductor

2.3
total resistance
R
electrical resistance as measured between the sensing clamps (includes both bulk and contact resistances)

See Figure 1 and Figure 2.

2.4
set-up resistance
R_s
resistance of the experimental set-up between the sensing clamps without metal sheet(s) between the electrodes, the two electrodes being in direct contact

See Figure 2 b), (R_0+R_1+R_7).

2.5
transition resistance
R_t
total resistance minus the set-up resistance

© ISO 2007 – All rights reserved

3 Basic principles

Figure 1 shows schematically the resistances in the weld zone of the spot welding process. The contact resistances are not directly accessible to measurement.

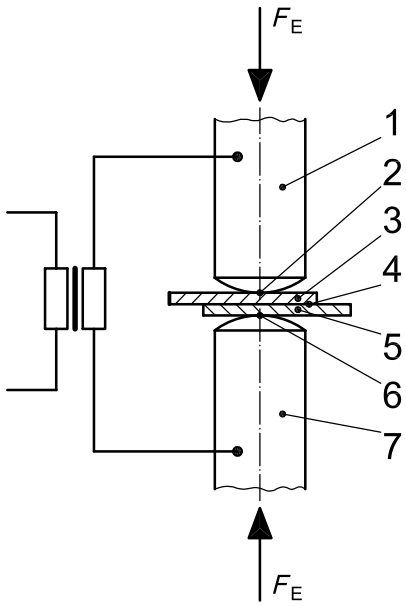

Key

F_E electrode force

1 bulk resistance of top electrode, R_1

2 contact resistance top electrode/upper sheet, R_2

3 bulk resistance of upper sheet, R_3

4 contact resistance sheet/sheet, R_4

5 bulk resistance of lower sheet, R_5

6 contact resistance lower sheet/bottom electrode, R_6

7 bulk resistance of bottom electrode, R_7

Figure 1 — Resistance (schematic illustration)

4 Measurement

4.1 Measuring set-up

Figure 2 a) shows schematically the experimental set-up for the determination of the transition resistance with one metal sheet between the electrodes. The total resistance is measured by means of the voltage/potential drop between the two sensing clamps.

Either one or two specimens are placed between the electrodes, the electrode force is applied and a rectified current from an external source is allowed to flow through the test pieces via the electrodes. The voltage drop between the sensing clamps is measured and the total resistance calculated using Ohm's law:

$$R = \frac{U}{I} \tag{1}$$

© ISO 2007 – All rights reserved

where

R is the total resistance, in ohms;

U is the voltage, in volts;

I is the current, in amperes.

The resistance of the experimental set-up, or set-up resistance, is obtained by measuring the voltage drop between the sensing clamps without any test pieces between the electrodes [see Figure 2 b)]. The set-up resistance comprises the bulk resistance of the electrodes between the sensing clamps and the contact resistance between the electrodes.

In the case of single metal sheet measurements, the total resistance consists of the bulk resistances of the top and bottom electrodes between the sensing clamps (R_1, R_7), the contact resistances (R_2, R_6) and the bulk resistance of the sheet (R_3) [see Figure 2 c)].

The total resistance, in the case of two-sheet measurements, consists of the bulk resistances of the top and bottom electrodes between the sensing clamps (R_1, R_7), the contact resistances (R_2, R_4, R_6) and bulk resistances of the two-sheets (R_3, R_5) [see Figure 2 d)].

© ISO 2007 – All rights reserved

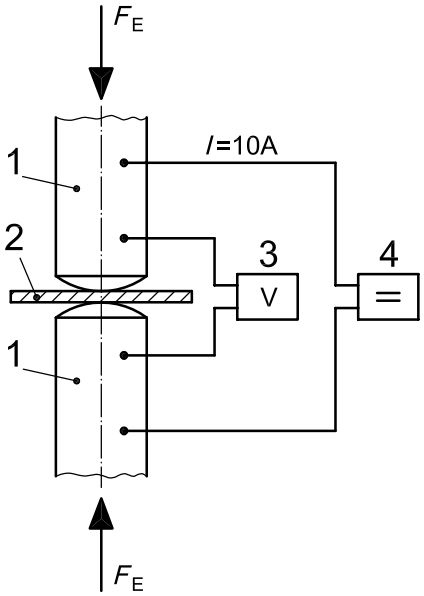

Key

1 electrode
2 sheet
3 voltmeter
4 d.c. current source
F_E electrode force
I current

a) Set-up for determining the transition resistance

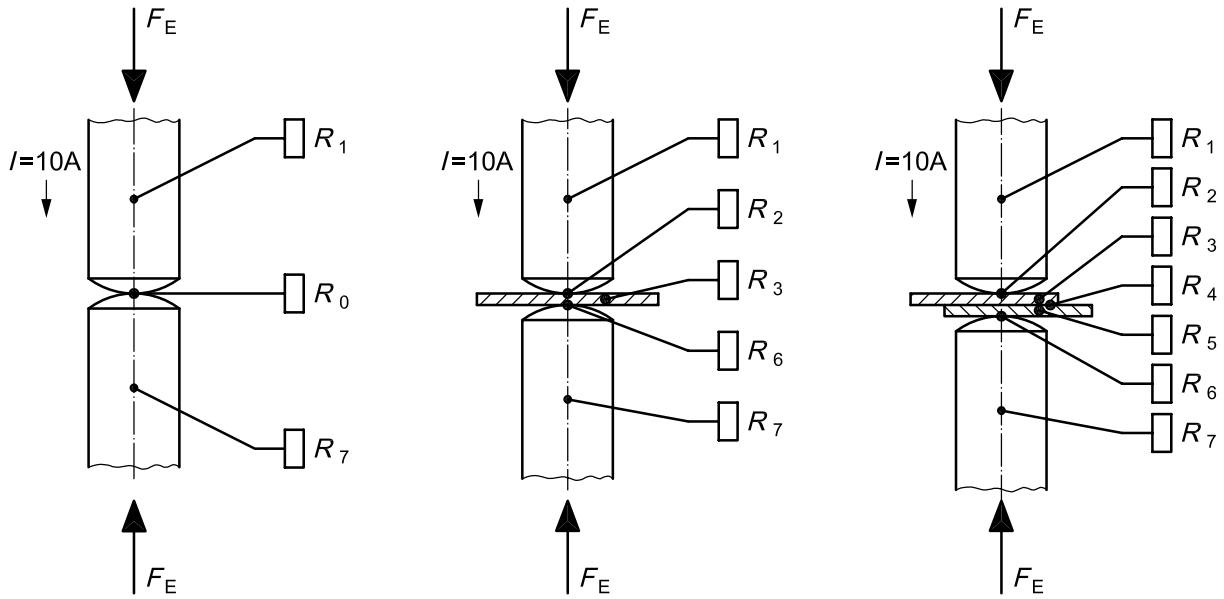

Key

F_E electrode force
I current
R_0 contact resistance
R_1; R_7 bulk resistance

b) Measurement of the set-up resistance

Key

F_E electrode force
I current
R_1; R_3; R_7; bulk resistance
R_2; R_6 contact resistance

c) Single-sheet measurement

Key

F_E electrode force
I current
R_1; R_3; R_5; R_7 bulk resistance
R_2; R_4; R_6 contact resistance

d) Two-sheet measurement

Figure 2 — Experimental set-up for determining the transition resistance

© ISO 2007 – All rights reserved

4.2 Measurement procedure

4.2.1 Preparatory steps

Test pieces, e.g. of a size 50 mm × 100 mm, are taken from each material to be investigated. Surface conditions which do not correspond to production conditions in the measurement area (e.g. dirt, scratches, fingerprints) are not permitted. Normal surface conditions (e.g. oiled, phosphated, conversion coated) shall be documented in the test report. In the case of two-sheet measurements, the specimens shall be flat. Burrs are not admissible at the sheet-to-sheet interface. Before starting the test, both the measuring set-up and the sheet material shall be at ambient conditions.

In the case of two-sheet measurements, it is recommended that the upper and lower surfaces of each metal sheet are marked with “A” and “B” respectively. It is further recommended that test runs with the following combinations are carried out:

— A-B/B-A,

— B-A/A-B, and

— A-B/A-B.

During a single test series, the surface position of the test pieces shall not be changed.

4.2.2 Determination of the set-up resistance

The experimental set-up is used as shown in Figure 2. The set-up resistance shall be measured, as described under 4.1, after the electrodes are brought together. The electrode speed shall not exceed 15 mm/s at contact, and the dynamic electrode force shall not exceed the set force.

The set-up resistance shall be measured before and after each test series. For this purpose, the electrodes shall be prepared using emery paper with a grain size of 1 200, first the top electrode and then the bottom one. Any dust shall be removed using a clean, dry tissue or micro-fibre cloth. The electrodes are then brought together and the set-up resistance measured as described above.

Since the set-up resistance can change during a test series due to pick-up on the working faces, the set-up resistance values shall be determined both before and after each test series. The set-up resistance for the test series is the mean value of the two measurements.

4.2.3 Measuring the total resistance

A minimum of seven measurements shall be carried out at different locations on each test piece (see 4.2.1). In order to make the seven measurements on each test series, the specimen shall be positioned between the electrodes and the electrode force applied. After the nominal value of the electrode force is reached, the d.c. power source is switched on and the voltage drop measured after an elapsed time of (15 ± 1) s.

The location of the measuring points shall be selected such that the distance centre-to-centre and centre-to-specimen edge is greater than, or equal to, 15 mm (see Figure 3).

© ISO 2007 – All rights reserved

Dimensions in millimetres

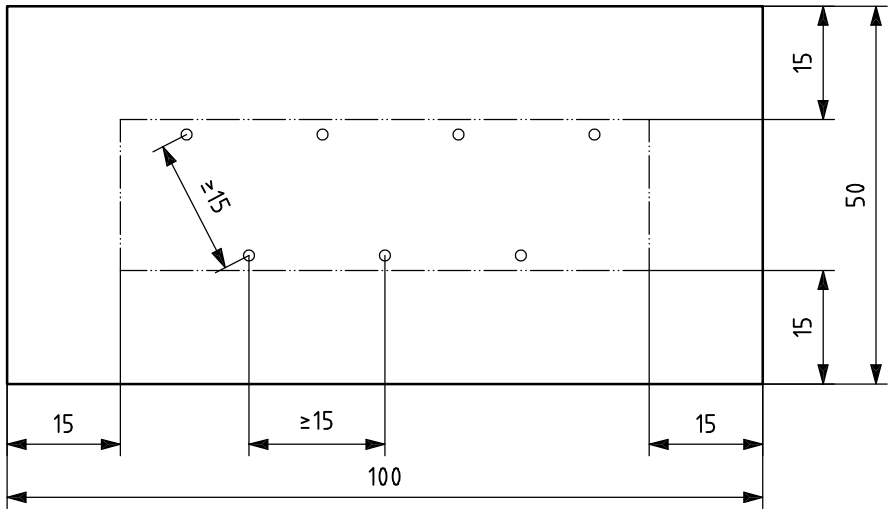

Figure 3 — Example for the location of the measuring points

The test pieces shall be positioned perpendicular to the axis of the electrodes. No relative movement between the electrode working faces and the specimen surface, e.g. vibration, rotation or sliding, is permitted.

The total resistance of the test series is the mean value of a minimum of seven measurements.

Since the contact resistance on a sheet or a component can vary from location to location, it is recommended that for representative results at least five test pieces are taken from different locations.

4.2.4 Determining the transition resistance

The transition resistance of a test series is the difference between the total resistance and the set-up resistance of the test series.

The mean value, the standard deviation and the coefficient of variation shall be calculated in accordance with Clause 6 [see Equations (6), (7) and (8)], using the results of at least five test pieces.

5 Test equipment

The mechanical system shall have a high stiffness in order to minimise a sliding of the electrode working faces. The eccentricity of the electrode axes shall not exceed 0,1 mm.

The distance between the introduction of the current and the sensing clamps shall be greater than 15 mm. If electrode caps are used, the sensing clamps shall be applied to the electrodes. Instead of the separate d.c. power source and the digital voltmeter, a precision resistance meter may also be used.

For details of the test equipment and set-up conditions to be used see Table 1.

© ISO 2007 – All rights reserved

Table 1 — Test equipment and set-up conditions

Measuring and testing equipment	Aluminium	Steel
Force-generating system		
— set-up force	5 kN to 7,5 kN[a]	3,5 kN
— maximum error	± 5 %	± 5 %
Electrodes		
— material	CuCrZr or CuCr	CuCrZr or CuCr
— diameter	⩾ 20 mm	⩾ 16 mm
— radius	150 mm to 300 mm[a]	40 mm to 50 mm[a]
d.c. power source[b]		
— set-up current	e.g. 10 A, < 100 A	
— maximum ripple	± 0,5 %	
— maximum error (reading value)	± 1 %	
Digital voltmeter[b]		
— sensitivity	⩽ 1 µV	
— maximum error of display	1,0 % and ± 1 digit	
(Micro-)Ohm meter		
— measuring current	e.g. 10 A, < 100 A	
— sensitivity	⩽ 0,1 µΩ	

[a] Data to be used shall be specified.

[b] The minimum resolution of the combination d.c. power source and digital voltmeter shall be ⩾ 0,1 µΩ.

6 Formulae and abbreviations for calculating the transition resistance

The set-up resistance, R_s, expressed in ohms, is calculated as follows:

$$R_s = \frac{U_s}{I} \tag{2}$$

where

I is the measured current, in amperes;

U_s is the set-up voltage, in volts, and calculated as follows:

$$U_s = \frac{(U_{sv} + U_{sn})}{2} \tag{3}$$

where

U_{sv} is the voltage drop between the sensing clamps on the electrodes due to the set-up resistance before test series, in volts;

U_{sn} is the voltage drop between the sensing clamps on the electrodes due to the set-up resistance after test series, in volts.

© ISO 2007 – All rights reserved

The mean value of the voltage drop in a test series, $\overline{U}$, expressed in volts, is calculated as follows:

$$\overline{U} = \frac{(U_1 + U_2 + U_3 + U_4 + U_5 + U_6 + U_7 ... + U_n)}{n} \tag{4}$$

where

U_1,..., U_n is the voltage drop between the sensing clamps on the electrodes during a test series.

The transition resistance, R_t, expressed in ohms, is calculated as follows:

$$R_t = \frac{\overline{U}}{I} - R_s \tag{5}$$

The mean value of the transition resistance, $\overline{R}_t$, expressed in ohms, is calculated as follows:

$$\overline{R}_t = \frac{1}{n} \times \sum_{i=1}^{n} R_{ti} \tag{6}$$

where

R_{ti} is the transition resistance at measuring point i, in ohms.

The standard deviation, s, expressed in ohms, is calculated as follows:

$$s = \sqrt{\frac{1}{(n-1)} \times \sum_{i=1}^{n} (R_{ti} - \overline{R}_t)^2} \tag{7}$$

The coefficient of variation, V, expressed as a percentage, is calculated as follows:

$$V = \left(\frac{s}{\overline{R}_t} \right) \times 100 \tag{8}$$

7 Test report

The test report(s) shall provide information regarding the following:

— test results;

— date of test;

— reference to this International Standard;

— examiner's name and signature.

See Annex A.

© ISO 2007 – All rights reserved

Annex A
(informative)

Test report

ISO 18594	Test report	

Measurement of the transition resistance

	Material 1	Material 2		
Order No.			Electrode force	kN
Number of specimen				
Material designation			Temperature	°C
Thickness [mm]			Radius of working face	mm
Surface condition Upper surface **A**				
Lower surface **B**			Specimen size	mm × mm

Electrodes:

☐ CuCrZr-Electrode (d =____ mm, R = ____ mm)

☐ CuCr-Electrode (d =____ mm, R = ____ mm)

Position of the sheets during the two-sheet measurements:

☐ A – B/B – A

☐ B – A/A – B

☐ A – B/A – B

Specimen	**1**	**2**	**3**	**4**	**5**	**6**	**7**	**8**	
U_{sv} [µV] Set-up resistance before test series									
U_{sn} [µV] Set-up resistance after test series									
U_1 [µV]									
U_2 [µV]									
U_3 [µV]									
U_4 [µV]									
U_5 [µV]									
U_6 [µV]									
U_7 [µV]									
U_n [µV]									

© ISO 2007 – All rights reserved

U [μV] $\left(\frac{1}{n}\times\sum_{i=1}^{n}U\right)$									
U_S [μV] $\left[\frac{(U_{sv}+U_{sn})}{2}\right]$									
R_s [μΩ] $\left(\frac{U_s}{I}\right)$									
R_t [μΩ] $\left(\frac{\overline{U}}{I}-R_s\right)$									

$\overline{R}_t=\frac{1}{n}\times\sum_{i=1}^{n}R_{ti}$	$s=\sqrt{\frac{1}{(n-1)}\times\sum_{i=1}^{n}(R_{ti}-\overline{R}_t)^2}$	$V=\left(\frac{s}{\overline{R}_t}\right)\times 100$
$\overline{R}_t$ = ... μΩ	s = ... μΩ	V =..... %

Date of test : ..... Page .... of .....

Examiner : .....

(Signature)

© ISO 2007 – All rights reserved

Bibliography

[1] ISO 5821, *Resistance spot welding electrode caps*

© ISO 2007 – All rights reserved

ICS 25.160.10

Price based on 11 pages

© ISO 2007 – All rights reserved