ICS: 25.160.10

Geregistreerde Belgische norm

NBN EN ISO 17660-2

1e uitg., januari 2007

Normklasse: F 11

Lassen - Lassen van betonstaal - Deel 2: Onbelaste lasverbindingen (ISO 17660-2:2006)

Soudage - Soudage des aciers d'armatures - Partie 2: Assemblages non transmettants (ISO 17660-2:2006)

Welding - Welding of reinforcing steel - Part 2: Non load-bearing welded joints (ISO 17660-2:2006)

Toelating tot publicatie: 03 november 2006

Deze Europese norm EN ISO 17660-2:2006 heeft de status van een Belgische norm.

Deze Europese norm bestaat in drie officiële versies (Duits, Engels, Frans).

Belgisch instituut voor normalisatie (BIN), vereniging zonder winstoogmerk
Brabançonnelaan 29 - 1000 BRUSSEL - telefoon: 02 738 01 12 - fax: 02 733 42 64
e-mail: info@bin.be - BIN Online: www.bin.be - prk. 000-0063310-66

© BIN 2007

Prijsgroep: 18

ICS: 25.160.10

norme belge enregistrée

NBN EN ISO 17660-2

1e éd., janvier 2007

Indice de classement: F 11

Soudage - Soudage des aciers d'armatures - Partie 2: Assemblages non transmettants (ISO 17660-2:2006)

Lassen - Lassen van betonstaal - Deel 2: Onbelaste lasverbindingen (ISO 17660-2:2006)

Welding - Welding of reinforcing steel - Part 2: Non load-bearing welded joints (ISO 17660-2:2006)

Autorisation de publication: 03 novembre 2006

La présente norme européenne EN ISO 17660-2:2006 a le statut d'une norme belge.

La présente norme européenne existe en trois versions officielles (allemand, anglais, français).

Institut belge de normalisation (IBN), association sans but lucratif
avenue de la Brabançonne 29 - 1000 BRUXELLES - téléphone: 02 738 01 12 - fax: 02 733 42 64
e-mail: info@ibn.be - IBN Online: www.ibn.be - CCP. 000-0063310-66

© IBN 2007

Prix: groupe 18

EUROPEAN STANDARD

NORME EUROPÉENNE

EUROPÄISCHE NORM

EN ISO 17660-2

September 2006

ICS 25.160.10

English Version

Welding - Welding of reinforcing steel - Part 2: Non load-bearing welded joints (ISO 17660-2:2006)

Soudage - Soudage des aciers d'armatures - Partie 2: Assemblages non transmettants (ISO 17660-2:2006)

Schweißen - Schweißen von Betonstahl - Tel 2: Nichttragende Schweißverbindungen (ISO 17660-2:2006)

This European Standard was approved by CEN on 2 August 2006.

CEN members are bound to comply with the CEN/CENELEC Internal Regulations which stipulate the conditions for giving this European Standard the status of a national standard without any alteration. Up-to-date lists and bibliographical references concerning such national standards may be obtained on application to the Central Secretariat or to any CEN member.

This European Standard exists in three official versions (English, French, German). A version in any other language made by translation under the responsibility of a CEN member into its own language and notified to the Central Secretariat has the same status as the official versions.

CEN members are the national standards bodies of Austria, Belgium, Cyprus, Czech Republic, Denmark, Estonia, Finland, France, Germany, Greece, Hungary, Iceland, Ireland, Italy, Latvia, Lithuania, Luxembourg, Malta, Netherlands, Norway, Poland, Portugal, Romania, Slovakia, Slovenia, Spain, Sweden, Switzerland and United Kingdom.

EUROPEAN COMMITTEE FOR STANDARDIZATION
COMITÉ EUROPÉEN DE NORMALISATION
EUROPÄISCHES KOMITEE FÜR NORMUNG

Management Centre: rue de Stassart, 36 B-1050 Brussels

© 2006 CEN All rights of exploitation in any form and by any means reserved worldwide for CEN national Members.

Ref. No. EN ISO 17660-2:2006: E

Foreword

This document (EN ISO 17660-2:2006) has been prepared by Technical Committee CEN/TC 121 "Welding", the secretariat of which is held by DIN, in collaboration with Technical Committee ISO/TC 44 "Welding and allied processes".

This European Standard shall be given the status of a national standard, either by publication of an identical text or by endorsement, at the latest by March 2007, and conflicting national standards shall be withdrawn at the latest by March 2007.

According to the CEN/CENELEC Internal Regulations, the national standards organizations of the following countries are bound to implement this European Standard: Austria, Belgium, Cyprus, Czech Republic, Denmark, Estonia, Finland, France, Germany, Greece, Hungary, Iceland, Ireland, Italy, Latvia, Lithuania, Luxembourg, Malta, Netherlands, Norway, Poland, Portugal, Romania, Slovakia, Slovenia, Spain, Sweden, Switzerland and United Kingdom.

INTERNATIONAL STANDARD

ISO 17660-2

First edition
2006-09-01

Welding — Welding of reinforcing steel —

Part 2: Non load-bearing welded joints

Soudage — Soudage des aciers d'armatures —

Partie 2: Assemblages non transmettants

Reference number
ISO 17660-2:2006(E)

© ISO 2006

PDF disclaimer

This PDF file may contain embedded typefaces. In accordance with Adobe's licensing policy, this file may be printed or viewed but shall not be edited unless the typefaces which are embedded are licensed to and installed on the computer performing the editing. In downloading this file, parties accept therein the responsibility of not infringing Adobe's licensing policy. The ISO Central Secretariat accepts no liability in this area.

Adobe is a trademark of Adobe Systems Incorporated.

Details of the software products used to create this PDF file can be found in the General Info relative to the file; the PDF-creation parameters were optimized for printing. Every care has been taken to ensure that the file is suitable for use by ISO member bodies. In the unlikely event that a problem relating to it is found, please inform the Central Secretariat at the address given below.

© ISO 2006

All rights reserved. Unless otherwise specified, no part of this publication may be reproduced or utilized in any form or by any means, electronic or mechanical, including photocopying and microfilm, without permission in writing from either ISO at the address below or ISO's member body in the country of the requester.

ISO copyright office
Case postale 56 • CH-1211 Geneva 20
Tel. + 41 22 749 01 11
Fax + 41 22 749 09 47
E-mail copyright@iso.org
Web www.iso.org

Published in Switzerland

Contents

Page

Foreword ... iv
Introduction ... v
1 Scope ... 1
2 Normative references ... 1
3 Terms and definitions ... 2
4 Symbols and abbreviated terms ... 2
5 Welding processes ... 3
6 Non load-bearing welded joints ... 3
7 Materials ... 5
8 Quality requirements ... 5
9 Welding personnel ... 5
10 Welding procedure specification (WPS) ... 6
11 Welding procedures ... 6
12 Production weld test ... 8
13 Execution and inspection of production welding of reinforcing steel ... 8
14 Examination and testing of test specimens ... 9
15 Production log ... 10
Annex A (informative) **Technical knowledge of welding coordinator for welding reinforcing steel bars** ... 11
Annex B (informative) **Test specimens** ... 12
Annex C (informative) **Evaluation of testing of welded joints** ... 13
Annex D (informative) **Example for production log** ... 14
Annex E (informative) **Examples of diameter combinations for welding cross joints using welding processes 21 and 23** ... 15
Bibliography ... 16

© ISO 2006 – All rights reserved

Foreword

ISO (the International Organization for Standardization) is a worldwide federation of national standards bodies (ISO member bodies). The work of preparing International Standards is normally carried out through ISO technical committees. Each member body interested in a subject for which a technical committee has been established has the right to be represented on that committee. International organizations, governmental and non-governmental, in liaison with ISO, also take part in the work. ISO collaborates closely with the International Electrotechnical Commission (IEC) on all matters of electrotechnical standardization.

International Standards are drafted in accordance with the rules given in the ISO/IEC Directives, Part 2.

The main task of technical committees is to prepare International Standards. Draft International Standards adopted by the technical committees are circulated to the member bodies for voting. Publication as an International Standard requires approval by at least 75 % of the member bodies casting a vote.

Attention is drawn to the possibility that some of the elements of this document may be the subject of patent rights. ISO shall not be held responsible for identifying any or all such patent rights.

ISO 17660-2 was prepared by the European Committee for Standardization (CEN) Technical Committee CEN/TC 121, *Welding*, in collaboration with Technical Committee ISO/TC 44, *Welding and allied processes*, Subcommittee SC 10, *Unification of requirements in the field of metal welding*, in accordance with the Agreement on technical cooperation between ISO and CEN (Vienna Agreement).

ISO 17660 consists of the following parts, under the general title *Welding — Welding of reinforcing steel*:

— *Part 1: Load-bearing welded joints*

— *Part 2: Non load-bearing welded joints*

Requests for official interpretations of any aspect of this part of ISO 17660 should be directed to the Secretariat of ISO/TC 44/SC 10 via your national standards body. A complete listing of these bodies can be found at www.iso.org.

© ISO 2006 – All rights reserved

Introduction

Reinforcing steel bars are produced by a number of process routes and usually have a ribbed profile. Taking these issues into account, it is apparent that both the welder and the welding coordinator require a specific level of skill and job knowledge and that special procedures for quality assurance need to be adopted.

© ISO 2006 – All rights reserved

Welding — Welding of reinforcing steel —

Part 2:
Non load-bearing welded joints

1 Scope

This part of ISO 17660 is applicable to the welding of weldable reinforcing steel and stainless reinforcing steel of non load-bearing welded joints, in workshops or on site. It specifies requirements for materials, design and execution of welded joints, welding personnel, quality requirements, examination and testing.

Load-bearing welded joints are covered by ISO 17660-1.

2 Normative references

The following referenced documents are indispensable for the application of this document. For dated references, only the edition cited applies. For undated references, the latest edition of the referenced document (including any amendments) applies.

ISO 3834-4, *Quality requirements for fusion welding of metallic materials — Part 4: Elementary quality requirements*

ISO 5817, *Welding — Fusion-welded joints in steel, nickel, titanium and their alloys (beam welding excluded) — Quality levels for imperfections*

ISO 14731:—[1], *Welding coordination — Tasks and responsibilities*

ISO 15609-1, *Specification and qualification of welding procedures for metallic materials — Welding procedure specification — Part 1: Arc welding*

ISO 15609-5, *Specification and qualification of welding procedures for metallic materials — Welding procedure specification — Part 5: Resistance welding*

ISO 15614-1, *Specification and qualification of welding procedures for metallic materials — Welding procedure test — Part 1: Arc and gas welding of steels and arc welding of nickel and nickel alloys*

ISO 15614-12, *Specification and qualification of welding procedures for metallic materials — Welding procedure test — Part 12: Spot, seam and projection welding*

ISO 15630-1, *Steel for the reinforcement and prestressing of concrete — Test methods — Part 1: Reinforcing bars, wire rod and wire*

ISO 16020, *Steel for the reinforcement and prestressing of concrete — Vocabulary*

EN 10079, *Definition of steel products*

EN 10080, *Steel for the reinforcement of concrete — Weldable reinforcing steel — General*

---

1) To be published (revision of ISO 14731:1997, EN 719:1994).

© ISO 2006 – All rights reserved

3 Terms and definitions

For the purposes of this document, the terms and definitions given in EN 10079, EN 10080 and ISO 16020 and the following apply.

3.1
load-bearing welded joint
welded joint used for transmission of specified loads between reinforcing steel bars, or between reinforcing steel bars and other steel products

3.2
non load-bearing welded joint
welded joint whose strength is not taken into account in the design of the reinforced concrete structure

3.3
manufacturer
enterprise carrying out the welding works within workshops or on site

4 Symbols and abbreviated terms

a	throat thickness
A_{gt}	percentage total elongation at maximum force
A_n	nominal cross-sectional area of the bar
d	nominal diameter of the welded bar
d_{max}	maximum nominal diameter of the welded bar
d_{min}	minimum nominal diameter of the welded bar
F_{max}	maximum tensile force
l	length of the weld (cross joint)
L_{min}	minimum length of the test specimen
r	radius of bent reinforcing steel bar
R_e	specified characteristic yield strength of the reinforcing steel bar
R_m	nominal tensile strength of the reinforcing steel bar
t	thickness of the web of a section or of a plate to be welded
CEV	carbon equivalent value
WPQR	welding procedure qualification record
WPS	welding procedure specification

© ISO 2006 – All rights reserved

5 Welding processes

The following welding processes in accordance with ISO 4063 may be used (see Table 1).

Table 1 — List of welding processes and reference numbers in accordance with ISO 4063

Welding process	English term	American term
111	manual metal arc welding (metal arc welding with covered electrode)	shielded metal arc welding
114	self-shielded tubular cored arc welding	
135	metal active gas welding (MAG-welding)	gas metal arc welding
136	tubular cored metal arc welding with active gas shield	flux cored arc welding
21	resistance spot welding	
23	projection welding	

The principles of this part of ISO 17660 may be applied to other welding processes.

6 Non load-bearing welded joints

6.1 General

A summary of recommended diameters for non load-bearing welded joints, depending on the welding process, is given in Table 2.

Table 2 — Recommended range of bar diameters for non load-bearing welded joints

Welding processes	Type of welded joint	Range of bar diameter for non load-bearing welded joints mm
21 23	lap joint	4 to 32
	cross joint [a]	6 to 50
111 114 135 136	lap joint	6 to 32
	cross joint [a]	6 to 50

[a] d_{min}/d_{max} should be $\geqslant$ 0,4.

The welds shall not influence significantly the full load-bearing capacity and ductility of the bars, and the welding procedure may not cause embrittlement of the material.

NOTE The purpose of a non load-bearing welded joint is normally only to keep the reinforcing components in their correct places during fabrication, transport and concreting. These welds are often referred to as tack welds. The tack weldability of reinforcing steels can be demonstrated by special tack weldability tests (see CEN/TR 15481).

© ISO 2006 – All rights reserved

6.2 Type of joints

An example of a lap joint is given in Figure 1. Examples of a cross joint are given in Figures 2 and 3. The length of the weld l and throat thickness a depend on the application, and shall be in accordance with the WPS.

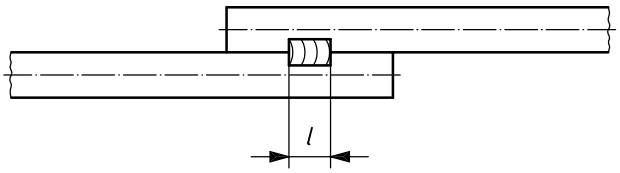

Key

l length of the weld

Figure 1 — Lap joint

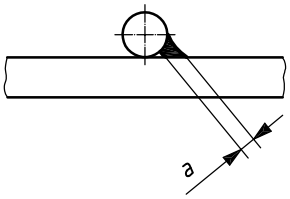

Key

a throat thickness

Figure 2 — Cross joint

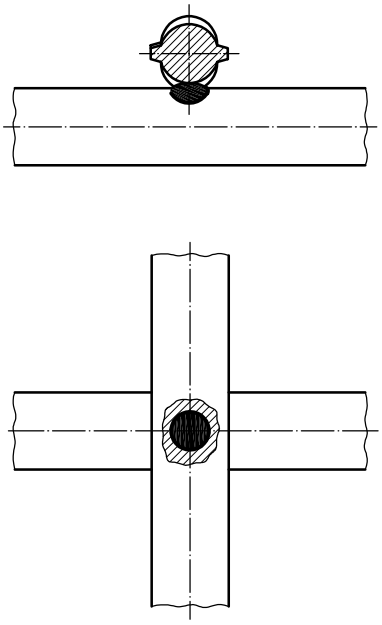

Figure 3 — Cross joint welded by welding processes 21 and 23

© ISO 2006 – All rights reserved

7 Materials

7.1 Parent materials

7.1.1 Reinforcing steels

Weldable reinforcing steel and stainless reinforcing steel, in accordance with the relevant standards or technical specification, may be used. For refurbishment and extensions of buildings, the weldability of the existing reinforcing steel shall be verified.

7.1.2 Inspection documents

An inspection certificate is required, unless the manufacturer of the reinforcing steel is certified to the relevant product standard for the market.

The carbon equivalent value (CEV), the manufacturing route and the delivery conditions shall be determined before welding.

This requirement for the CEV does not apply if:

a) the weldability is proven by a welding procedure test with a maximum CEV allowed in accordance with the relevant product standard, or

b) it can be proven that the steel delivered has an equal or lower CEV than the steel used in the welding procedure test.

For reinforcing and structural steels, the CEV shall be in accordance with the product standard, and shall be calculated in accordance with the following equation:

$$\mathrm{CEV} = \mathrm{C} + \frac{\mathrm{Mn}}{6} + \frac{\mathrm{Cr} + \mathrm{Mo} + \mathrm{V}}{5} + \frac{\mathrm{Ni} + \mathrm{Cu}}{15} \qquad (1)$$

7.2 Welding consumables

Welding consumables to be used shall be qualified in accordance with the relevant standard.

8 Quality requirements

Manufacturers which perform shop- or site-welding of non load-bearing welded joints with reinforcing steel shall fulfil the quality requirements specified in ISO 3834-4, as applicable, as well as the requirements of this part of ISO 17660.

9 Welding personnel

9.1 Welding coordination

The manufacturer of welded reinforcing steel joints shall have at its disposal at least one welding coordinator conforming to the requirements of ISO 14731, with specific technical knowledge in the welding of reinforcing steel (see Annex A).

The welding coordination personnel shall be responsible for the quality of welded reinforcing steel joints in the workshop as well as on the site. The welding coordination personnel shall ensure that all welding is carried out in accordance with qualified welding procedure specifications and that it complies with ISO 15609-1 or

© ISO 2006 – All rights reserved

ISO 15609-5, as appropriate. The welding procedure specification shall be available for inspection at the workplace (see Clause 10).

The welding coordination personnel shall take remedial measures in cases of imperfections.

The welding coordinator shall evaluate those welders under his supervision.

NOTE For the surveillance of the welding works, the welding coordinator can be assisted by employees of the manufacturer with sufficient welding training or experience. This does not affect the responsibility of the welding coordinator.

9.2 Welder and operator qualifications

The welders shall receive training on the welding of non load-bearing welded joints, and shall demonstrate that they are capable of producing acceptable joints. At the end of the training period, the welders shall weld a relevant number of test specimens (e.g. in accordance with the test specimens in Annex B), which shall be evaluated by the welding coordinator. The welding coordinator shall confirm the training and the positive result of the tests for each welder.

10 Welding procedure specification (WPS)

Welding procedures shall be prepared in accordance with ISO 15609-1 or ISO 15609-5, as appropriate. However, the WPS shall be supplemented with the additional essential parameters in Clause 11.

11 Welding procedures

11.1 General

Prior to production welding, all welding procedures shall be qualified with a welding procedure test.

11.2 Test specimens

The test specimens may be chosen from Annex B, as appropriate.

11.3 Examination and testing

For each type of joint, three tensile tests shall be carried out. For cross joints, the tensile tests shall be carried out on the thinner bar.

11.4 Acceptance criteria

The acceptance criteria for examination and testing shall meet the requirements given in Clause 14.

11.5 Range of qualification

11.5.1 Material

A welding procedure test carried out on one steel grade does not qualify for other steel grades.

The carbon equivalent for the material used in the welding procedure test qualifies materials with an equal or lower carbon equivalent, but not those with higher carbon equivalents.

 © ISO 2006 – All rights reserved

11.5.2 Load-bearing

A welding procedure test carried out on load-bearing welded joints qualifies for non load-bearing welded joints, but not vice-versa.

11.5.3 Production route of reinforcing steel

A welding procedure test is restricted to the manufacturing process of the reinforcing steel used in the welding procedure test (see ISO 16020).

11.5.4 Diameter of reinforcing steel bar and material thickness

The range of qualification for the diameter of reinforcing steel bar and material thickness is given in Table 3.

Table 3 — Range of qualification for the diameter of reinforcing steel bar and material thickness

Diameter and plate thickness used for the welding procedure test [a]	Range of qualification
d/d	one nominal diameter up and down, provided that the bars are of the same diameter [b]
d_{max}/d_{max} d_{min}/d_{min}	all joints between d_{max}/d_{max} and d_{min}/d_{min} with equal diameter
d_{max}/d_{max} d_{min}/d_{min} d_{max}/d_{min} [c]	all combinations of dimensions from d_{min} to d_{max}

[a] For test pieces containing different diameters, both diameters shall be tested.

[b] Diameters > 32 mm shall be tested separately.

[c] For the combination d_{max}/d_{min}, different diameters as for the qualification d_{max}/d_{max} and d_{min}/d_{min} may be used. The range of qualification is given by the diameter ratio used. Examples of typical diameter combinations for welding cross joints using welding processes 21 and 23 are shown in Annex E.

11.5.5 Other essential variables

The range of qualification for other essential variables shall meet the requirements of the appropriate International Standards for different welding processes, in accordance with Table 4.

Table 4 — Appropriate International Standards for different welding processes

Welding process	Appropriate International Standard
Arc welding (111, 114, 135, 136)	ISO 15614-1 [a]
Spot and projection welding (21, 23)	ISO 15614-12

[a] The requirements concerning heat input may be neglected for cross welds.

11.6 Validity

The validity of the welding procedure test is unlimited, providing that it is confirmed by production weld tests. If there is an interruption in the production work for a period of more than 12 months, the welding procedure test shall be renewed by a production weld test (see Clause 12).

© ISO 2006 – All rights reserved

12 Production weld test

A production weld test shall be carried out to ensure that under the local fabrication conditions, in the workshop or on site, the same quality of weld can be produced in accordance with the welding procedure qualification. One test piece shall be welded by each welder and for each WPQR, and shall be tested by a tensile test (see Annex C for an example of a WPQR form).

In the case of continuous production using the same qualified welding procedure in workshops, the time period between production weld tests shall be defined and shall not exceed six months. In other cases, one test series is required at the start of each contract and then every three months.

If the production weld test fails, the welders involved shall be trained sufficiently before the production weld test is repeated. Only after a successful result of a production weld test may welding commence. Additional appropriate actions shall be taken, and records of such actions shall be maintained.

The results of the production weld tests shall be recorded in the production log (see Clause 15). The production log shall be retained for at least five years.

13 Execution and inspection of production welding of reinforcing steel

13.1 General

Each weld shall be visually inspected. For welded joints in reinforcing steel made by arc-welding processes, the quality level D applies for surface imperfections, as appropriate, in accordance with ISO 5817 (except for undercuts, where quality level C applies). For other processes, acceptance criteria apply in accordance with the relevant standard for procedures.

NOTE 1 To avoid loss of strength, it is advisable that the heat input be limited when using specific types of reinforcing steels, e.g. cold-worked or quenched and self-tempered steels.

Welder and welds shall be suitably protected against environmental factors, such as wind, rain and snow.

In addition, dirt, grease, oil, moisture, rust, loose scale, and paint shall be removed from the area to be welded.

Whenever the welding conditions, e.g. high cooling rate, temperature less than 0°C, may affect the weldability, suitable measures shall be defined in the welding procedure specification (WPS). If using welding processes 135 and 136, the weld areas should be protected against wind and air movements.

NOTE 2 For diameters above 40 mm, it is sometimes necessary to determine the preheating temperature in accordance with ISO/TR 17671-2.

Welding shall only be done in accordance with qualified welding procedure specifications, which shall be present at the working place.

13.2 Welding of bent reinforcing steel bars

Welds may be placed in the bends in accordance with Figure 4, either on the inside or on the outside of the bend.

 © ISO 2006 – All rights reserved

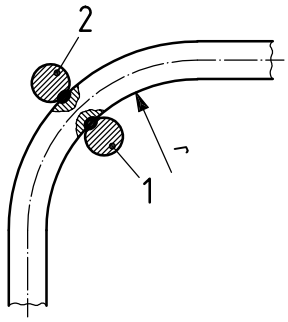

Key

1 cross joint inside the bend

2 cross joint outside the bend

r radius of bent reinforcing steel bar

Figure 4 — Cross joints in bends

NOTE In cases where welding will be carried out before bending, it is advisable to take into account special design requirements for mandrel diameters.

13.3 Welds made by welding processes 21 and 23

Welding equipment with synchronous control shall be used.

The welding equipment shall be capable of providing a welding current, welding times and electrode force that are reproducible. Shaped electrodes shall be used unless otherwise specified.

The welding parameters shall be set in accordance with the appropriate WPS before welding.

14 Examination and testing of test specimens

14.1 General

Test specimens shall be welded in accordance with the relevant welding procedure specification.

All test pieces shall be visually inspected prior to testing. For welded joints in reinforcing steel made by arc-welding processes, only those test specimens that have met the requirements of quality level D for surface imperfections, as appropriate (except undercut, where quality level C applies), in accordance with ISO 5817, shall be subject to further mechanical testing. Undercuts may influence the transmittable force. For welding processes 21 and 23, acceptance criteria in accordance with ISO 15614-12 apply.

Tensile tests shall be carried out in accordance with ISO 15630-1.

14.2 Test specimen

The tensile test shall be carried out on the as-welded test specimen and, where practicable, the location of the weld shall be positioned approximately in the centre of the test specimen.

Recommended test specimens are given in Annex B.

Where a standard tensile test specimen cannot be prepared, the test specimen shall be agreed between the welding coordinator and the test laboratory.

© ISO 2006 – All rights reserved

14.3 Evaluation of results

The fracture surface of the weld shall not contain any imperfections larger than the requirements of quality level D, as appropriate, in accordance with ISO 5817.

If not specified otherwise, the following requirements shall be met:

$$F_{max} \geqslant A_n \cdot R_m \quad (2)$$

where

F_{max} is the maximum tensile force, in N;

A_n is the nominal cross-sectional area of the bar, in mm^2;

R_m is the nominal tensile strength of the bar, in N/mm^2.

If R_m is not specified for the parent material, the value of R_m shall be taken as the specified characteristic yield strength R_e of the bar multiplied by the specified characteristic R_m/R_e ratio.

Other mechanical properties, e.g. A_{gt}, may be required and measured, depending on the material standard being used or the design specification.

NOTE A_{gt} is measured over the weld area.

14.4 Report of results

The following shall be reported as the results of the test, as appropriate:

a) the welding procedure specification used;

b) the type of test specimen and its dimensions;

c) the maximum tensile force achieved, in kN;

d) the location of the fracture;

e) the type and location of any imperfection on the fracture surface;

f) the type and location of any imperfection identified during the visual inspection;

g) the elongation achieved, in % (if required).

The report shall clearly state whether or not the requirements of this part of ISO 17660 have been met.

15 Production log

The manufacturer shall keep a record of production monitoring, known as a production log, which records the WPQR, the results of all production tests (routine and pre-production tests) and all important production data. The manufacturer shall keep a different log for each welding process and the log shall be maintained at the workplace. Annex D is an example form and should be used where appropriate.

 © ISO 2006 – All rights reserved

Annex A
(informative)

Technical knowledge of welding coordinator for welding reinforcing steel bars

The technical knowledge of a welding coordinator for welding reinforcing steel bars may be attained through:

— a special course, in accordance with EWF 544-01, or

— national training programmes, or

— manufacturing experience (ISO 14731:—, 6.1).

© ISO 2006 – All rights reserved

Annex B
(informative)

Test specimens

B.1 General

Dimensions given in Figures B.1 and B.2 are recommended. The actual dimensions of test pieces should be confirmed with the test laboratory.

B.2 Test specimens

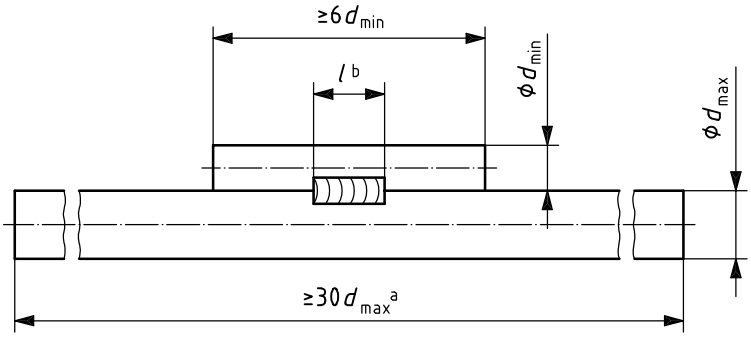

a L_{min} = 300 mm

b 10 mm $\leqslant l \leqslant$ 15 mm

Figure B.1 — Test specimen for lap joint (tensile test)

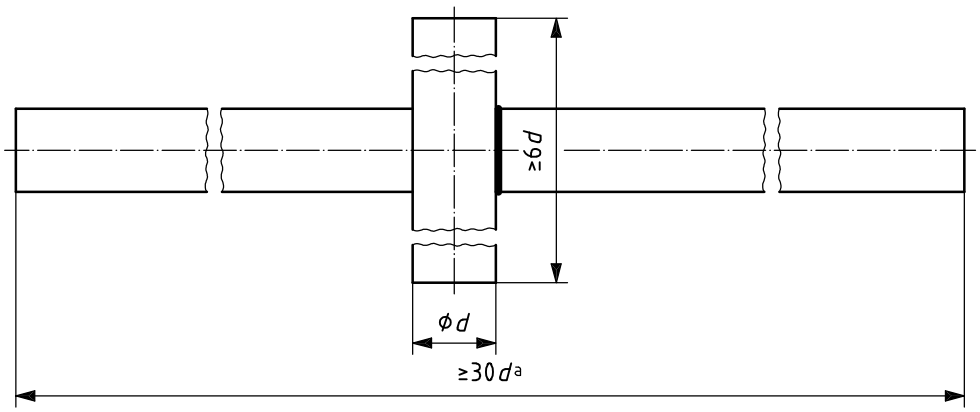

a L_{min} = 300 mm

NOTE For testing purposes after welding, the length of the cross bar can be reduced to the diameter of the main bar.

Figure B.2 — Test piece for cross joints (tensile test)

© ISO 2006 – All rights reserved

Annex C
(informative)

Evaluation of testing of welded joints

Test report number:	Welding procedure test: ☐	Page ..... of .....
Manufacturer:	Production weld test: ☐	Date of welding:
Location (workshop or on the site):		Date of testing:

Welding coordinator (name):	Welder (name):	Welding process:
		Filler designation:

Test piece number	Test piece, as per figure	Welding position, in accordance with ISO 6947	Steel grade	Test piece diameter or thick-ness mm	Throat thick-ness mm	Quality level of surface imperfections, in accordance with ISO 5817	Ulti-mate force N	Fracture area mm^2	Tensile strength N/mm^2	Location of fracture	Quality level of internal imperfections in fracture area, in accordance with ISO 5817	Re-marks	Result a = accepted na = not accepted

....

Manufacturer (name, date and signature) **Examiner or examining body** (name, date and signature)

© ISO 2006 – All rights reserved

Annex D
(informative)

Example for production log

Manufacturer: .....

Location of welding (workshop or on the site): .....

Welding process:.....

Table D.1 — Necessary information to be given

Date of welding	Shift number	Type of welded joint	WPS-number	Project number/ Drawing number/ Position number	Dimensions (bar diameter/ plate thickness)	Number of welds	Result of examination	Non-conformity and corrective actions	Name and signature of welding coordination personnel

© ISO 2006 – All rights reserved

Annex E
(informative)

Examples of diameter combinations for welding cross joints using welding processes 21 and 23

Table E.1 — Examples of diameter combinations for welding cross joints with welding processes 21 and 23

Dimensions in millimetres

Diameter of bar 2	Diameter of bar 1								
	8	10	12	14	16	20	25	32	40
8	—	X	X	X	X	X	—	—	—
10	X	X	X	X	X	X	X	—	—
12	X	X	X	X	X	X	X	—	—
14	X	X	X	X	X	X	X	X	—
16	X	X	X	X	X	X	X	X	X
20	X	X	X	X	X	X	X	X	X
25	—	X	X	X	X	X	X	X	X
32	—	—	—	X	X	X	X	—	—
40	—	—	—	—	X	X	X	—	—

NOTE The above is an example of range of couples of diameters covered by a qualification, for which tests were performed on the following couples of diameters:

— d_{min}/d_{min}: 8 mm × 10 mm

— d_{max}/d_{max}: 40 mm × 25 mm

— d_{min}/d_{max}: 10 mm × 25 mm (minimum ratio d_{min}/d_{max} is 0,4)

© ISO 2006 – All rights reserved

Bibliography

[1] ISO 4063, *Welding and allied processes — Nomenclature of processes and reference numbers*

[2] ISO 6947, *Welds —Working positions — Definitions of angles of slope and rotation*

[3] ISO 15630-2, *Steel for the reinforcement and prestressing of concrete — Test methods — Part 2: Welded fabric*

[4] ISO 17660-1, *Welding — Welding of reinforcing steel — Part 1: Load-bearing welded joints*

[5] CEN/TR 15481, *Welding of reinforcing steel — Tack weldability — Test methods and performance requirements*

[6] ISO/TR 17671-2[2)], *Welding — Recommendations for welding of metallic materials — Part 2: Arc welding of ferritic steels*

[7] EWF 544-01, *Special course for welding reinforcing bars at the specialist level*

2) Equivalent to EN 1011-2.

© ISO 2006 – All rights reserved

ICS 25.160.10

Price based on 16 pages

© ISO 2006 – All rights reserved